NOTES

ON THE

PREPARATION OF FOREST WORKING-PLANS

BENGAL SECRETARIAT LIBRARY.

BY

W. E. D'ARCY,
INDIAN FOREST DEPARTMENT.

Issued from the Office of the Inspector General of Forests, Working-Plans Section.

CALCUTTA:
OFFICE OF THE SUPERINTENDENT OF GOVERNMENT PRINTING, INDIA.
1892.

The following suggestions for the preparation of Working-Plans for Forests in India, written by Mr. D'Arcy when Assistant Inspector General of Forests and Superintendent of Working-Plans, are issued in order to serve as a guide in the compilation of Working-Plans, and not as a code of official instructions.

Office of Inspector General of Forests,

CALCUTTA,

The 17th November 1891.

INTRODUCTION.

IT is sought in these *Notes* to explain, in a practical manner, the form in which Working-Plans, such as are at present required for the State Forests of India, should be compiled, so that it may be possible to apply and to control them. The discussion of calculations and theories which are inapplicable in the actual condition of Indian Forestry has, as far as possible, been avoided.

The only means by which Local Governments have hitherto, as a rule, attempted to secure a supply of forest-produce for the use of the agricultural population, has been by burdening forest lands with "*rights*" under settlements. Hence we find, in Northern India especially, many cases in which Government has voluntarily rendered itself helpless to prevent the destruction of the forest property it desires to preserve. Such mistakes will cease to be made when it is realized that the purpose with which each forest should be managed can be prescribed by means of Working-Plans.

But, in order that the vast areas under the control of the Forest Department in India may be brought under the provisions of Working-Plans within a measurable distance of time, it is necessary that the agency of subordinate officers should be more largely utilized than has hitherto been the custom in the collection of the data on which these plans are based, and that this may be feasible, some such instructions as the present are obviously required.

The writer desires to acknowledge the aid he has derived from the work on "*Aménagement*," recently published by *M. Puton, Directeur de l'École Nationale Forestière in France.* He is also indebted to the courtesy of *M. Bartet, Inspecteur des Forêts, in charge of the Station de Recherches at the*

Nancy Forest School, for copies of several Working-Plans in force in France. These Plans, as well as several of the Plans compiled by officers in India, have been largely utilized, as have also *Mr. Fernandez's translation of M. Broillard's "Aménagement,"* and an excellent "*Short Treatise on the Measurement of Timber Crops*" which appeared in the "*Forester*" in 1889.

W. E. D'ARCY.

February 1891.

BENGAL SECRETARIAT LIBRARY.

TABLE OF CONTENTS.

CHAPTER I.

Preliminary Explanations.

Working-Plan.

PAGE

Meaning of the term Forest organization 1
" " Working-Plan . . . . . *ib.*

The Forest Capital or Producing Stock.

Meaning of the term constitution of the producing stock 2
" " when the age-classes are irregularly distributed . . 4
Information afforded by the number of trees of each age class . . . *ib.*
Summary of the chief points to be remembered with regard to the capital . 6
Normal forest 7
Abnormal forest 8

The Exploitable Age.

Meaning of the term . . . . . *ib.*
Calculation of the exploitable age 10
Exploitable age for State forests . . . . . *ib.*

Increment.

Meaning of the term 12
Increment of isolated trees and crops compared 13

Possibility.

Meaning of the term 14
Method of prescribing the possibility . . . . . *ib.*
Sustained yield 15

Revenue and Interest.

Meaning of the terms 16
Revenue, the net value of the produce . . . . . *ib.*
Relation of revenue to area 17
Interest 18

Other technical Terms.

Necessity for defining those terms . . . . . *ib.*
Crop, tree, shrub, evergreen tree, deciduous tree, conifer, broad-leaved tree . *ib.*
Underwood, brushwood, herbage, windfall, gregarious tree, hard woods, bole, crown, leaf canopy, regular and irregular forest, storied forest, principal and accessory species 19
Minor produce, age, pure and mixed crops, density, isolated trees and canopied forest, complete and incomplete crops, interrupted crops, blanks, glades, close, crowded or open crops, cover, shade 20

PAGE

Suppression, nurse, seedling, seedling forest, names of crops, seedling crop, thicket, pole crop, high forest, stages of growth of trees (seedling, sapling, pole, tree), reserve or standard, clearing 21

Clean felling, stool shoot, root sucker, coppice, regeneration fellings, improvement fellings, natural regeneration, artificial regeneration, names of fellings, method of treatment, permanent methods, temporary methods, method of clearances 22

Selection method, storied forest method, method of successive regeneration fellings 23

Group method, pastoral method, simple coppice, selection coppice, coppice with standards 24

Branch-coppice or pollard method, irregular treatment, provisional treatment, conversions 25

Transformations, restorations, thinnings, cleanings, weeding 26

Working-circle, block 27

Coupe, compartment 28

CHAPTER II.

Preliminary Work in connection with the preparation of a Plan.

Reconnaissance of the Area.

Selection of the area to be dealt with 29

Information to be collected 30

Maps 32

Choice of the Method of Treatment.

Subdivision of the area into sections requiring different treatment . . 33

Choice of the methods to be applied . . . . . *ib.*

Formation of the Working Circles.

Rules regarding the selection of circles 36

Analysis of the Crop.

Subdivision of the area 38

Detailed description of each subdivision . . . . . *ib.*

The situation 39

The soil . . . . . *ib.*

The crop 40

Stock maps 42

Valuation Surveys.

Surveys, when required, methods in use 44

Choice of a method 45

Method of sample plots; selection of the plots 46

Size-classes of trees enumerated 47

The enumeration of the trees; procedure 48

Recording the results of the enumeration 50

PAGE

Calculating the volume of Material.

Type-trees and form-factors 51

The measurement of Trees and Logs.

General rules 53

Calculation of the Exploitable Age.

General rules 58

CHAPTER III.

The Working-Plan.

Preliminary Explanations.

Arrangement followed 63
Manner in which the possibility is prescribed . . . . . *ib.*
General and special plans . . . . . *ib.*
Provisional working scheme 64
Preparatory period . . . . . *ib.*
Prescribing the fellings 65
Period for which fellings are prescribed . . . . . *ib.*
Area operated on 66
Balancing the production 67
Locating the fellings 68
Nature of the fellings . . . . . *ib.*
The possibility 69

Method of Simple Coppice.

General plan . . . . . *ib.*
Exploitable age . . . . . *ib.*
Period for which the fellings are prescribed . . . . . *ib.*
Area to be operated on . . . . . *ib.*
Order to be followed in the fellings . . . . . *ib.*
Nature of the fellings 70
Possibility . . . . . *ib.*
Conversion of irregular forest into coppice 71
Supplementary regulations; belts of trees 72
Works of improvement 73

Coppice-selection Method.

General plan . . . . . *ib.*

Branch-coppice Method.

PAGE
General plan 73
Modification of the method 74

Method of Coppice with Standards.

The general plan . . . . . *ib.*
Reservation of standards . . . . . *ib.*
Supplementary regulations 76
Conversion of irregular high forest to coppice with standards . . . 77
Transformation of simple coppice into coppice with standards . . . *ib.*

Methods of Clearances.

General plan . . . . . *ib.*
Clean fellings with artificial regeneration 78

Storied Forest.

General plan . . . . . *ib.*

Selection Method.

General plan 81
Limitation of the fellings . . . . . *ib.*
Limitation by cultural rules 82
Cases in which fellings may be limited by cultural rules 83
Limitation determined by the rate of growth 84
By an enumeration of the trees 85
By the productive capacity of the soil 88
By successive valuations of the standing crop 91
By relative proportion 92
By proportionate volume 95
Length of the felling rotation 98
The fellings 99
Restoration of an incomplete crop . . . . . *ib.*

Method of successive Regeneration Fellings.

General description 100
Possibility; volumetric method 101
" ; mixed method 102
The fellings 105
Modifications of the mixed method 106
Application of the method to irregular crops . . . . . *ib.*

Group Method.

General description 108

Pastoral Treatment.

PAGE

Areas to which applicable 108
Application of method 109

Supplementary Provisions of Working Scheme.

Subjects to be dealt with 111
Improvement fellings . . . . . *ib.*
Sowings and plantings . . . . . *ib.*
Regulation of grazing . . . . . *ib.*
" of rights 115
Extraction of dead or fallen trees 116
Works of improvement other than cultural . . . . . *ib.*
Forecast of financial results 117

CHAPTER IV.

COMPILATION OF THE WORKING-PLAN REPORT.

General remarks 118
Arrangement of subjects . . . . . *ib.*

Information to be recorded under each heading.

Introduction 120
Name and situation 121
Configuration of the ground . . . . . *ib.*
Soil . . . . . *ib.*
Climate 122
Agricultural customs affecting the proposals 123
Distribution and area . . . . . *ib.*
Boundaries 125
Legal position 126
Rights 127
Description of the forest growth 129
Injuries to which liable 131
System of management 132
Special works of improvement 133
Revenue and expenditure 134
Marketable products . . . . . *ib.*
Export lines 135
Markets . . . . . *ib.*
Mode of extraction and cost 136
Net price realized for the produce . . . . . *ib.*
The forest staff 137
Labour supply . . . . . *ib.*
Working circles . . . . . *ib.*

PAGE

Subdivision into blocks or compartments 139
Analysis of the crop . . . . . *ib.*
Purpose with which forest should be managed 140
Method of treatment . . . . . *ib.*
The exploitable age 141
General scheme of working and calculation of the possibility . . . . *ib.*
Period for which the fellings are prescribed 142
Areas to be felled annually or periodically . . . . . *ib.*
Rules regarding the conduct of the fellings 143
Tabular statement of fellings 144
Supplementary provisions 145
Improvement fellings 146
Regulation of rights and concessions 147
Sowings and plantings 148
Roads, buildings, and other works 149
Summary of works of improvement 150
Miscellaneous provisions 151
Changes in the forest staff . . . . . *ib.*
Forecast of financial results . . . . . *ib.*

Appendices.

Maps 152
Description of the crop in each block 153
Record of results of valuation surveys 155
Record of rate of growth 157

CHAPTER V.

CONCLUDING REMARKS.

Extent to which the provisions of a Working-Plan should be indicated on the ground by visible marks and lines 158
On the control of Working-Plans; its object; and manner in which it should be carried out . . . . . *ib.*

BENGAL SECRETARIAT LIBRARY.

NOTES

ON THE

PREPARATION OF FOREST WORKING-PLANS.

CHAPTER I.

PRELIMINARY EXPLANATIONS.

Working-Plan.

Meaning of the term "Forest organization."—In order that a *forest*—which is here understood to mean an area set apart for the production of any forest produce—may fulfil its purpose, it is necessary that its limits and its legal status should be determined, and the object with which it is to be managed defined; that is to say, it must be demarcated, surveyed, settled and its working prescribed in a Plan.

Although the principal product of a forest is *generally* wood in some form, this is not always so. It may be sought to obtain other products of trees, such as gums or resins, or leaves for fodder, or to preserve the trees for the sake of indirect benefits derived from them, such as protection to the soil. The only saleable product of many areas under the control of the Forest Department in India is grass, but it may be necessary, in order to obtain this, to preserve the trees to shelter the soil, as without them the land might become barren.

All these preliminary operations, of which the preparation of the Working-Plan is only one, are expressed by the term '*forest organization.*'

The term is, however, frequently used without qualification to express the last of these operations only, namely, the preparation of the Working-Plan. Thus '*organized forest*' is generally understood to mean a forest for which a Working-Plan has been prescribed. An '*organized crop*' is one which fulfils the conditions required by a Working-Plan.

Meaning of the term "Working-Plan."—A Working-Plan sets forth the purpose with which a forest should be managed

so as to best meet the interests or wishes of the owner, and indicates the means by which this purpose may be accomplished. In other words, it is a forest regulation prescribing the application of certain cultural rules and the execution of certain works in order to produce a given desired result.

Trees do not usually attain the size at which they give useful products for a considerable number of years after commencing life. It follows that the crop in a forest, which is worked so as to give a regular supply, has (at least where this is timber or wood) to furnish annually a product which only matures at very much longer periods. It is the chief purpose of a Working-Plan to secure the condition of crop that this requires.

Both the object sought and the means by which the object can be attained depend on a variety of facts relating to the forest and its management, and in order that the prescriptions contained in the Working-Plan may be fully understood, it is necessary that these facts should be stated and the manner in which the prescriptions have been deduced from them explained. These *facts, deductions* and *prescriptions* are recorded in a single report which, although usually embodying several separate plans, is generally, for conciseness, called the "*Working-Plan*" of the whole area dealt with.

It is unfortunate that our term "Working-Plan" cannot be utilized, like its French equivalent "*projet d'aménagement*," to signify the art of preparing plans (*aménagement*), the action (*aménager*), and the person who prepares them (*aménagist*). "Organization" has been, to a certain extent, adopted as the equivalent of "*aménagement*," but, as already explained, this includes the survey, settlement and demarcation of the forest, as well as the preparation of the plan. We may, however, in the absence of a better word, agree to use *organization* in the more restricted sense. *Taxation* has been proposed, but does not appear to be generally acceptable. The French word is derived from "*a*" and "*ménage*" (household) and implies the management of a forest, so as to meet the regularly recurring wants of a household; in other words, to produce a *sustained yield*. It is, therefore, very forcible, and no good English equivalent for the word has as yet been proposed.

The Forest Capital or Producing Stock.

Meaning of the term.—It has been stated that the chief purpose of a Working-Plan is, generally, to secure the condition of crop that is necessary in order that the forest may yield perpetually a regular supply of produce. It is of the utmost importance to have a clear conception of this condition, that is to say of the constitution of the crop in an

organized forest. Without this, it is impossible to understand the reasons for the mode of applying the simplest method of treatment.

In popular estimation a forest consists of a confused collection of trees of all sizes This is not, however, the case in an organised forest capable of furnishing an uninterrupted supply of material of a definite kind. Such a forest must be built up, so to speak, of an unbroken series of trees or crops of all ages from the seedling to the mature tree. Thus, if we were dealing with isolated trees and it was desired to fell, say, one twenty-year old tree every year, it is evident that it would be necessary to have already growing at least 20 trees, one tree 20 years old, one 19 years, one 18 years, and so on; down to the seedling one year old. If we had not this stock of different ages to deal with, the desired felling could not be made. If, for instance, all the trees were of the same age, say 10 years old, we would have, in order to get one tree a year, to commence by felling a tree of that age and would end by having to fell a tree 30 years old.

The same reasoning applies to *crops*, that is to say collections of trees occupying definite areas. If it were desired to fell every year, say, one acre of forest containing trees 20 years old, it would be necessary to have 20 acres of forest, of which one acre should be 20 years old, one 19 years, and so on, down to the crop one year old. In each case a *producing stock* of 19 trees or 19 acres is requisite in order that one tree or one acre may be regularly produced each year.

The producing stock in a forest organized in this manner is called 'capital,' because it acts, it will be seen, in the same way as the money capital (or what the money represents) in producing *interest* in the shape of wood. In fact the forest may fairly be compared to a wood manufactory in which each individual tree is a workman engaged in producing wood. It must not, however, be overlooked, as has often been done to the ruin of the forest, that the workmen in such a manufactory and the produce of their labour are identical, and that in removing the produce, the producers may easily be removed too. The producing stock thus fulfils the economist's definition of "capital," *the produce of former labour*. The term "capital" as here used has nothing to do with the *money value* of the crop or the money invested in the forest. This latter of course includes the value of the land.

If we suppose that in the annexed figure, No. 1, the *growths* of the

crops of different ages are represented to scale on the vertical line, and the *areas* occupied by each crop on the horizontal line, the arrangement of the crops would be graphically represented as there shown.

It is evident that with such a crop there could be felled each year a crop 20 years old, one acre in extent, and that this could be repeated year after year. There would always be on the ground the year after a felling a series of crops from 1 to 20 years old—in fact the same *wood capital.*

If, instead of this regularity, some of the age-classes were missing—if, we will suppose, there were no crops of from 10 to 18 years of age—it is evident that 2 years after the commencement of operations the oldest crop would be 12 years old, and it would be necessary either to fell trees of that age or wait for 8 years until the next crops had become 20 years old. In this case, which may be graphically represented in the same way as before, as shown in the accompanying figure, No. 2, the capital or stock is insufficient and is irregularly constituted, some of the age-classes being absent. This irregularity in the constitution of the capital of a forest will very frequently be met with.

Constitution of the stock when the age-classes are irregularly distributed.—We have hitherto supposed that the crops of different ages have been arranged following one another in regular succession, as is generally seen in the case of coppice fellings. If, however, instead of this, the growths of different ages were scattered about in patches, the *capital* would still be the same, and it would still be true that, in order to fell an acre 20 years old every year, it is necessary that there must exist on the ground a complete scale of growths, each covering one acre, from 1 to 20 years old.

Carrying the subdivision still further we arrive at the condition of a forest such as the selection method of working leads to. The different classes of growth are so much scattered about that the trees overtop one another. We cannot measure the area occupied by each class, but we know by analogy that such classes must exist if the forest is to furnish uninterruptedly its full yield.

Information afforded by the number of trees of each age-class.—As regards the *number of trees* in the capital or stock of a forest, it need hardly be explained that, although the areas occupied by the crop of each age-class may be equal, the numbers of trees in each age-class are very far from being the same. There are infinitely more stems in a young crop, if complete, than in an older crop occupying the same area, but containing trees with large crowns.

In fact, if we were actually to count the stems from the seedling upwards on each acre in a perfectly regular forest, such as that shown

in figure 1, the result, we may suppose by way of illustration, would be something as follows: —

1st	acre	containing	about	110	trees	20	years old.
2nd	,,	,,	,,	120	,,	19	,,
3rd	,,	,,	,,	130	,,	18	,,
4th	,,	,,	,,	150	,,	17	,,
5th	,,	,,	,,	170	,,	16	,,
6th	,,	,,	,,	190	,,	15	,,
7th	,,	,,	,,	220	,,	14	,,
8th	,,	,,	,,	250	,,	13	,,
9th	,,	,,	,,	300	,,	12	,,
10th	,,	,,	,,	350	,,	11	,,
11th	,,	,,	,,	400	,,	10	,,
12th	,,	,,	,,	500	,,	9	,,
13th	,,	,,	,,	600	,,	8	,,
14th	,,	,,	,,	800	,,	7	,,
15th	,,	,,	,,	1,000	,,	6	,,
16th	,,	,,	,,	2,000	,,	5	,,
17th	,,	,,	,,	5,000	,,	4	,,
18th	,,	,,	,,	10,000	,,	3	,,
19th	,,	,,	,,	20,000	,,	2	,,
20th	,,	,,	,,	40,000	,,	1	year old.

TOTAL 20 acres containing about 82,290 stems.

[NOTE.—These figures, it need hardly be explained, are merely given in order to make the meaning of what is stated more clear. The number of stems would vary with the species and with almost every other circumstance.]

In actual practice we could not, of course, distinguish from one another trees differing in age by only one year. If the trees in such a forest as the above had to be counted, they would be grouped into age-classes of, say,—

I.—Exploitable trees . . .		20	years old
II.—Poles	19 to	12	,, ,,
III.—Saplings	11 to	5	,, ,,
IV.—Young seedlings . . .	below	5	,, ,,

and all that would be known about the crop would be that it contained of—

Class I	110 trees
,, II	1,530 ,,
,, III	5,650 ,,
,, IV	abundant.

This would not tell us whether the capital was properly constituted or not. We could only tell that it was complete, and that all stages of growth were well represented; for we cannot even approximately estimate the relative number of trees in each age-class which *ought* to be found on the ground in an irregular forest: indeed, the relative proportion

is constantly changing. That is one of the chief drawbacks to the application of the selection method of working, and the reason why there are so many different ways of attempting to arrive at the possibility of such forests. Where the crops of different ages occupy different areas, nothing is simpler than to measure the areas and to arrive at a correct estimate of the quantity of material the forest can produce and what it ought to produce; but, in the case of irregular crops, we can neither measure the area occupied by each age-class nor derive any very accurate information as regards the sufficiency or otherwise of the capital from the number of trees found to be growing in the forest.

Summary of the chief points to be remembered with regard to the constitution of the forest capital.—If we suppose that figures Nos. 1 and 2 represent in section the volume of material produced in each coupe year by year, these figures will assist in explaining the chief facts to be remembered with regard to the constitution of the forest capital, which are as follows:—

(*a*) In order that a forest may be able to furnish uninterruptedly a regular supply of material of a definite kind, the capital on the ground must contain a complete series of trees or crops of all ages from the seedling to the mature tree.

This, it may be seen, is certainly true with regard to crops which are regularly constituted by area. By analogy as has been explained, we may assume it to be true also as regards crops in which the age-classes are irregularly distributed.

(*b*) Where the capital is normally constituted, the exploitable material is equal to the mean average production of one year over the whole area.

This is very important in showing that by the arrangement of felling by annual coupes the annual production is obtained. It would not be possible to collect this annual production over the whole area of the forest. It may be easily seen in figure 1 that the exploitable material, the shaded pillar, is equal to the production of the one year over all the coupes, and that this is the *average production.*

It follows from this that in a selection-worked forest in which the capital is normally constituted, the trees that become exploitable in any period of years are equal to the average production on the whole area for that period. For instance, in a period of ten years, it would be within the production to fell all the trees that attain exploitable size during the ten years. The danger of applying this rule is that we never know whether the capital in the selection-worked forest is normal or not, and consequently whether such a felling is in excess of the production or not; if all the trees were nearly mature, for instance, the whole of the capital might be removed in one year under such a rule.

(*c*) The quantity of the exploitable material felled in any period bears a fixed proportion to the capital, but the amount of this capital varies with the age at which the forest is exploited, being greatest when the age is greatest, and *vice versâ.*

This most important principle is evident from an inspection of figure 1. We may suppose that this figure represents in section the wood capital on the ground, which remains constant, and it will be seen that this section is practically equal to one-half the rectangle having for one side the line representing the area of the forest, and for the other the growth during the exploitable age. If the exploitable age were double, the capital would be represented, as in the accompanying figure 2, by a similar rectangle, of which one side (that representing the growth) would be approximately doubled in length; in other words, the capital would be doubled. The produce removed would, however, remain *very nearly the same*, as, although the coupes would be halved, the number (one for each year in the exploitable age) would be doubled.

The proportion between the produce felled and the capital, it will be seen, would remain constant so long as the exploitable age remained the same, but would vary with every change in this age.

Thus, suppose the area dealt with in the above example was 20 acres, divided into 20 coupes, of one acre each, and that the average annual production of material was found to amount to 100 cubic feet solid per acre per annum. Felled at the age of 20 years the capital on the ground would always be, very nearly, $\frac{20 \times 100 \times 20}{2}$ cubic feet, or 20,000 cubic feet, while the quantity of material removed at each felling would amount to $1 \times 100 \times 20$ cubic feet $= 2{,}000$ cubic feet, or to *one-tenth*, or *10 per cent. of the capital.*

Suppose now that the age of felling was raised to 40 years, and that the area was consequently divided into 40 coupes, as in the annexed figure No. 3. The capital on the ground, even assuming the average production to be slightly higher than it was before, or 120 cubic feet per acre per annum, would be approximately $\frac{20 \times 120 \times 40}{2} = 48{,}000$ cubic feet, more than double what it was before, while the quantity of material felled (a crop 40 years old occupying *half* an acre) would be $\frac{1}{2} \times 120 \times 40 = 2{,}400$ cubic feet (very little more than before), and would amount to *one-twentieth*, or *5 per cent. of the capital.*

Normal forest.—A forest is said to be *normal* when, in addition to being constituted of a complete series of growths of all ages from the seedling to the exploitable tree, each age-class occupying equal areas, it is completely stocked and

the growth is proportionate to the fertility of the soil. It follows that there is nothing absolute in the term, a normal capital with regard to one method of treatment or age of exploitation would be abnormal under any other age or treatment.

In a normal forest, the quantity and quality of the growing stock are sufficient with regard to the age of exploitation. There are no blanks or damaged stems, the proper proportion and gradation of age-classes exists, and these are distributed in the manner required by the method of treatment.

Abnormal forest.—It follows that a perfectly normal forest is a purely ideal creation. No such forests actually exist,* although many approach the condition when they have been under regular organized treatment for a long period. A forest may be abnormal for any one or all of the following reasons :—

The quantity of material in the capital is insufficient or superabundant.

A complete scale of age-classes does not exist, or the proportion between these classes is defective.

The growth is defective.

The peculiar constitution of the capital in a forest capable of furnishing an uninterrupted supply of material is sufficient of itself to explain why a Working-Plan is requisite for the management of a forest estate, although a farm or industrial enterprise can be perfectly well managed without such a plan. The capital in the case of a forest requires many years to create, while in the case of a manufactory or of a farm, the working capital, buildings, implements, seed, live-stock, &c., can be procured in a few days or months. There are, however, many other reasons. The material produced by a forest, wood, is the same as the capital or material that produces it. At the same time this material has to be preserved in its growing state for long, as it has no value when it is first produced. The Forester is, therefore, liable to reduce his capital without knowing it ; he is even tempted to do so, as he thereby temporarily increases his income without feeling the effects for many years. A farmer cannot reduce his capital without immediately feeling the effect of this. If he does, or if he makes a mistake in his methods of farming, he can correct this immediately by the expenditure of a little additional money and labour. A Forester can only correct his mistakes, even if he discovers them, after a long lapse of time.

The Exploitable Age.

Meaning of the term.—A forest, like any other undertaking, must be managed or, as it is called, *exploited*, with a definite

* NOTE.—Some of the Nilgiri Eucalyptus Plantations are almost normal.

purpose. This purpose, which may of course be one of a great many, is expressed by the term *exploitability*.

Thus, it may be sought to produce material of a definite kind or size, fuel and small pieces of timber for the neighbouring population, or large trees of a certain species, sal or deodar; or the object sought may be to produce the greatest quantity of material; or, again, the financial aspect alone may be considered, and it may be sought to obtain the highest annual money- revenue or the highest rate of interest on the capital (value of the soil, including the money laid out in improvements, and of the growing stock) invested in the forest. In other cases, the object may simply be to preserve the trees for the sake of the shelter they afford to the soil or some other indirect benefits derived from them.

It is usual to group the various classes of exploitability into classes, such as *qualitative*, *quantitative*, *commercial*, &c., but there is no need for these expressions. The purpose with which a forest is managed can be more easily expressed in ordinary language. Forestry could be very well conducted without employing any of the above terms.

The crop in a forest is said to be *exploitable* when it has attained the condition that is required in order to fulfil the purpose with which it is worked. The age of the trees when this condition is reached is called the *exploitable age*.

Thus, a forest exploited for fuel, or for timber to furnish sleepers, would be exploitable when, the capital being properly constituted, the oldest trees were large enough to furnish the size of fuel required or the sleepers. The age of the trees when this had taken place would be the *exploitable age*.

The *exploitable age* also expresses the time in which the new growth in a crop which is being regenerated requires to attain exploitable dimensions. The crop which is regenerated has to supply material during that time.

The use of the word *rotation* or *revolution* (Fr. révolution) to express the exploitable age is due to the fact that, under the methods of treatment very generally in use *in former days*, the interval between successive fellings in the same area was equal to the number of years in the exploitable age. At present this is generally only true in the case of coppice. In most other cases the fellings pass over the area several times during the course of the so-called *rotation*. The use of the word is therefore confusing, and in these pages it will be used only to express the *felling rotation*. When referring to the age at which the trees are felled the term *exploitable age* will be used.

The age at which the trees are felled is not, however, always the exploitable age. Owing to irregularities in the composition of the forest capital it frequently happens that, during a longer or shorter period, which may, and strictly speaking *ought* to be, the same length at exploitable age, trees or crops have to be exploited before or after the exploitable term.

Calculation of the exploitable age.—The price and the utility of wood depends, as a rule, on its dimensions, that is to say on the age of the trees when felled. In order to determine this age (in a forest exploited for its wood), it is sufficent (for present purposes) to ascertain the size of the trees that will furnish the greatest quantity of the produce that is most useful or that will bring in the highest price. The average age at which the trees attain this size can then be determined from observations regarding the rate of growth. Where the trees are simply preserved with a view to indirect benefits, such as the shelter they afford to the soil for instance, the exploitable age will generally approach the greatest age they can reach.

It may be objected that the age at which a crop yields the greatest quantity of material, or the highest interest on the capital invested, is not the age at which the individual trees are the largest. This is perfectly true, but, on the other hand, if the trees were felled at the ages at which the crop yields the greatest amount of material or the highest interest, both of which conditions are reached at comparatively low ages, the material would not be of the most useful size or bring in the most money.

It would not be much use ascertaining that at the age of 10 years a forest would yield the highest interest on the capital invested, or that, at the age of 20 years, say, it would give the greatest quantity of material, when the requirements were large trees 150 years old.

Even if this was not the case there are hardly any instances in which there are data available for making such calculations. The age at which an exploitation furnishes the greatest quantity of produce is that at which the sum of the production, that is to say, the *total* quantity of material produced (*including whatever has been removed or disappeared since the trees first sprang up*), divided by the age of the crop, is greatest. The material removed is of course hardly ever known, and even if it were known, the experiments that would be required, felling a number of crops of different ages and dividing their total volume by the age, would be impossible in India to carry out for want of crops of different ages to experiment on.

As regards calculating the age at which the interest on the capital invested in the forest will be highest, this involves ascertaining by experiment the quantity of material the forest would yield if felled at various ages and the net price at which this material could be sold, and it is, therefore, only in rare instances that the calculation could be made.

It may, therefore, be affirmed that the exploitable age of forest crops is the age at which the individual trees furnish the kind of produce that is most wanted. This is not necessarily by any means the age at which the trees are largest; it may quite well be the age at which small rafters or fuel billets are produced.

Exploitable age for State Forests.—There are two great classes of proprietors of forest property, the private owner and the State. With the private owner we are not here concerned.

He will evidently suit his own interests, felling the produce when it will either best suit his wants, or bring in the highest annual revenue or the highest interest on the capital invested on the forest, as he may consider best for himself. It is, however, frequently asserted that the State as representing the community at large should *always* fell the largest trees because these furnish the produce that will be most generally useful: for a large tree will yield small timber but large timber cannot be obtained from a small tree. This is, however, only true in so far that the State alone, as a rule, can grow large trees; private owners will not do so, as it does not pay them; so that if large wood is required, it must be produced by the State. The price realized is the best measure of the utility, and if large timber sells well, it is certain that it is in demand and is therefore useful. By felling the produce that fetches the highest price the public will, therefore, in *most* cases, though not always, be best served.

Where the price of large timber is not higher than that of small, there is no pecuniary advantage in felling at an advanced age. Exclusive of very young crops, and those in which decay has absolutely set in, the *average annual* quantity of material produced is not very much altered by the age at which the crop is felled.

Experiments made in a fir forest in France gave as follows:—

Age of the crop when felled.	Volume of material per acre	Average annual production per acre.
80	9,299 cubic feet	116·2 cubic feet.
90	11,441 „ „	127·1 „ „
100	13,481 „ „	134·8 „ „
110	15,300 „ „	139·1 „ „
120	16,755 „ „	139·6 „ „
130	17,963 „ „	138·1 „ „
140	18,785 „ „	134·1 „ „

It follows that such a forest, of, say, 1,000 acres (wooded area), exploited at 80 years in 80 annual coupes of 12·5 acres each, would yield 12·5 × 9,299 cubic feet, or 116,237 cubic feet a year; while the same forest similarly exploited at 120 years, the age of the highest average yield, would produce 8·3 × 16,755 cubic feet = 139,066 cubic feet. This would not be always a sufficient increase to justify waiting for 40 years for it. When, however, there is a demand for the produce, the greater size of the pieces of timber might so enormously increase the *value* of the produce as to justify the fellings being made at the more advanced age. Thus, the 116,237 cubic feet produced yearly at 80 years might be worth only, say, four annas a cubic foot, or in all R29,000, while the

large pieces in the fellings at 120 years might easily be worth one rupee a cubic foot and so raise the price of the 139,066 cubic feet produced yearly at that age to R1,39,000. Such examples are frequent in countries where there is an unlimited demand for the whole of the produce of the forests, but this does not often happen in India.

The law of the increase in the value of the produce with its size is not always true in India where there are no local industries and where good roads for extracting the produce are rarely available. In order that the rule may hold good, there must be a sufficient demand and the means for extraction must be adequate. In the hills and out-of-the-way places where forests are found in India, it is often practically impossible to work out large pieces of timber except at a prohibitive cost. In such cases, the means of transport is the main factor in determining the size at which trees should be felled.

There are even cases in which, owing to the trouble and cost of converting large pieces of timber, which are not required, into smaller pieces, large wood actually fetches a lower net price than small wood.

It is, however, generally owing to want of good roads that there is no demand for forest produce, especially for large timber. This is a defect that can often be altered by a judicious outlay of Forest Department funds and this should form the subject of careful investigation in the working-plan.

Increment.

Meaning of the term.—The increase, due to growth, which takes place during any given time in the volume of material in a tree or crop has received the special name of *increment.* A distinction is made between the *annual increment* and the *average* or *mean* increment.

When the length of the period referred to is one year, the increase is called the *annual increment.* When this period includes a number of years, the *average* is obtained by dividing the total increase during the whole length of the period by the number of years and is called the *mean annual increment* or *mean increment.*

The terms *annual production* and *mean annual production* are also used instead of *increment.*

The annual increment is extremely difficult to measure or to estimate except empirically, and as its calculation is of little practical importance, the methods employed need not be explained here.

A tree 100 years old is found to contain 115 cubic feet of wood, and it is calculated that its production from 90 to 100 years was 1·5 cubic feet Its annual production or mean increment at 100 years is 1·5 cubic feet.

Ten years later it is found to contain 130 cubic feet. Its average production during that period is $\frac{130-115}{10} = 1{\cdot}5$ cubic feet.

The average annual production or mean increment during its lifetime at 100 years is $\frac{115}{100} = 1{\cdot}15$ cubic feet.

In the case of crops, the production is necessarily expressed with reference to the area, at so much per acre, but this cannot be done in the case of isolated trees because the area covered is uncertain and changes from year to year.

In calculating the average production of crops, the total production during the period, including the material yielded at thinnings, &c., must be included in the calculation.

Three acres of high seedling forest, 100 years old, which has already furnished in thinnings 5,000 cubic feet, is found to contain 25,000 cubic feet of timber. The average annual production or mean increment at 100 years is therefrom $\frac{25\,000 + 5{,}000}{3 \times 100} = \frac{30{,}000}{300} = 100$ cubic feet.

The average annual production or mean increment during a given period, which is sometimes of importance, is calculated in the same way.

Increment of isolated trees and crops compared.—The mean annual production of isolated trees varies greatly with the age and continually increases, while that of a crop occupying a given area varies much less and increases up to a certain point and then diminishes.

The following examples are taken from measurements made in India :—

Isolated trees.			Crops per acre.				
Age of trees.	Volume in cubic feet stacked.	Mean annual production cubic feet stacked.	Age of crops.	Volume on ground in cubic feet stacked.	Previous yield from thinnings, in cubic feet stacked.	Total volume, in cubic feet stacked.	Mean annual production per acre, in cubic feet stacked.
8	2	0 25	8	1,200	*Nil*	1,200	150
10	3	0 30	10	1,600	225	1,825	182
12	7·7	0 64	12	1,725	525	2,250	187
14	12·1	0·86	14	1,810	870	2,680	191
16	19 2	1 20	16	1,910	1,172	3,092	193
18	26 1	1 45	18	2,088	1,364	3,452	191
20	33 2	1 51	20	2,324	1,494	3,818	190
22	42 4	1·93	22	2,544	1,660	4,204	190

The reason for this is easy to understand. The quantity of material produced each year on an acre of forest, whether it is covered with young trees or old, does not differ so much as might be expected, as this production is due to the fertility of the soil, the light, &c. When the crop is young, it contains 40,000 or 50,000 young seedlings, each producing a very small quantity of material. When the crop is old, although each tree produces a hundred or a thousand times as much as each seedling, the acre only contains a few such stems.

In the case of isolated trees, however, the area is not taken into account. Each tree starts as a young seedling, producing very little, and ends as a large tree producing a great deal. Hence there is a constant increase in the average production of single trees.

Possibility.

Meaning of the term.—The most important calculations and provisions in a working-plan are those which relate to what is called the *possibility*.

Theoretically, the *possibility* is the productive power of the soil of a wooded area expressed in quantity of material. Practically, it is taken to mean the quantity of material which, without infringing the rules of forestry, may be felled in a forest, annually or periodically, for the time being. This latter quantity depends on the constitution of the capital and the relation this bears to the age of exploitation determined on. If the capital is sufficient and normally constituted, as in the example illustrated in figure 1, for instance, the possibility is equal to the average annual production over the whole area. If, on the other hand, the capital is insufficient, as in the case illustrated in figure 2 for instance, or superabundant, a quantity of material, less or greater, as the case may be, than the average increment, must be felled during a certain provisional period until the normal state is reached.

A forest of 20 acres, which it is proposed to exploit as coppice at 20 years, is found to contain a complete series of growths of all ages from 1 to 20 years, each occupying one acre. Here the possibility would evidently be a crop growing on one acre when 20 years old (*vide* figure 1). If, instead of this, the crop was constituted as shown in figure 2, in order to obtain an annual yield of produce not less than 20 years old, it would be necessary during a provisional period to make the two crops of 19 and 20 years old last for some 10 years until the crops of 10 years old attained or approached 20 years of age The possibility in this case might be fixed during the provisional period as the crop growing on $\frac{2}{10}$ths of an acre per year, after which it would become the normal one of the crop on one acre.

Methods of prescribing the possibility.—As it is impossible to collect the annual production all over the area, it is necessary

to prescribe the realization of the possibility in some practicable way.

The realization of the possibility can be prescribed in three ways, *viz.*, (i) by *area*, (ii) by the *number of trees*, (iii) by the *volume of material*. The first method is the simplest and is that followed in the case of coppice fellings, the method of clearance and of clean fellings and in the selection method of fellings regulated by cultural rules. The number of trees to be felled is prescribed in the case of standards over coppice and in the selection method. It is only in applying the method of successive regeneration fellings with thinnings, and, more rarely, in the selection method, that the volume of material to be felled is, as a rule, prescribed. In actual practice, however, in addition to prescribing the quantity of material, the areas in which the fellings are to be made are also prescribed. Practically, therefore, what is prescribed is the felling on a given area of either the crop, a stated number of trees, or volume of material.

In whatever way the realization of the possibility may be prescribed, it should be formulated in a simple manner, easy to apply and to control, and so that it constitutes of itself the Working-Plan.

A rule such as the following would fulfil these conditions :—

> "Each year there will be felled by the selection method in successive annual coupes of one-tenth the area, a number of trees not exceeding 700, in the proportion of 4 firs to 3 oaks."

Or, where the number of trees was not prescribed and the fellings were limited by sylvicultural rules, and possibly, in addition, a maximum volume of material, the rule might be something like the following :—

> "There will be felled on one-tenth of the area each year all dead, diseased or damaged stems, and those that it is otherwise desirable, for sylvicultural reasons, to remove; the maximum volume of material removed being limited to 600 cubic feet on an average per acre."

The neglect of these rules in some of our Indian working-plans has rendered it impossible either to control or to apply them. In some of these plans the felling of a dozen or more different kinds of trees is separately prescribed in numbers varying for each compartment, and in some cases the felling of one class is prescribed by number of trees, and of another class by number of cubic feet.

A sustained yield.—As the crops we have to deal with are always abnormal, it is evident that the yield, although methods devised for determining it are the best possible, will not be exactly equal or *sustained* from period to period.

Equality can no more be attained from the moment

of putting in force of a working-plan than the normal constitution of the crop can be attained. Ordinarily, a fairly equal yield from year to year during the length of one period may be secured, but even this may be freely sacrificed in the interest of sound or economical administration, especially during the provisional period in which the stock is being reconstituted.

The German foresters always compare the yield, which it is proposed to remove, with the normal production, or "*potential possibility*" as it has sometimes been called in writings in India. Unfortunately in India it is not often that the potential possibility can be ascertained or applied owing to only a few species irregularly distributed throughout the crop being saleable.

Revenue and Interest.

Meaning of the terms.—The income in money derived from a forest, after deducting the cost of felling and extracting the produce, is called *the revenue*. The *net revenue* is the balance of income left after deducting the cost of maintaining and, if necessary, improving the forest.

A forest yields every year 500 trees which, when converted and conveyed to the market at a cost of R2,000, sell for R10,000. The revenue amounts to R8,000. If the cost of maintaining and administering the forest, including necessary works of improvement, amounted for the year to R4,000, the net revenue would be R4,000. The *gross receipts* amount to R10,000, but of this R2,000 is merely an advance made in order to realize the produce and which has been recovered on selling this produce.

Revenue is the net value of produce.—In calculations or comparisons of revenue it is necessary to make use of the figures giving the revenue after deducting the cost of felling and extracting the produce, and not the *gross receipts* or price realized for the produce after it has been sold. This latter includes money *advanced* in order to place the produce in the market, and these advances are recovered when this produce is sold. There is no case in which large produce will not fetch more than small, if taken far enough to a large market, but this would not make it more advantageous to grow such produce, if the cost of production and carriage was not covered by the higher realizations. The net price might still be less than that realized for small material.

The statements showing the gross receipts as entered in the accounts are almost invariably made use of in India. How misleading this may prove will be seen from the following comparison between the true financial results of the working of the Department for the year 1888-89 and these results as they appear when the expenditure on timber works is

treated as outlay on the forest and not as an advance which is recovered when the produce is sold:—

Head	Revenue.		Expenditure on the forests	Percentage of Revenue expended on the forests.
	Total	Per square mile.		
	R	R	R	R
Gross receipts as recorded in accounts . . .	1,38,93,884	137	78,19,421	56
Revenue after deducting sums advanced for timber works . .	88 55,377	87	27,80,920	31

Relation of revenue to area.—For purposes of comparison the revenue may be usefully stated in the same way as the production with reference to the area from which it is derived.

In the example on the preceding page, suppose the area to be 4,000 acres of mixed forest yielding teak and worked by the selection method, the revenue per acre is $\frac{8,000}{4,000}$, or R2; the net revenue per acre is $\frac{4,000}{4,000}$ = R1.

Where the yield is realized periodically, the *average revenue* during the whole length of the exploitation must be calculated in the same way as the average production is calculated; indeed, one depends on the other. Where the period is long, compound interest on all receipts and charges should be included.

The average annual revenue per acre derived from the forests in India, including of course vast areas of unworked lands, amounts to about 2 annas an acre as compared with a similar revenue of R7, or R8, and even in some cases very much more, in European countries. The average true revenue from the Indian forests for the 10 years 1879-80 to 1888-89 amounted to R66,00,000; the average area under control during that time amounted to about 90,000 square miles. In France, a statement prepared in 1878 showed the average revenue (net value of produce standing in the forest) to amount to 40 francs per hectare (2 47 acres) for the whole of the State forests In the north of France the average annual revenue rose as high as 89 francs, while in the south, in the forests open to grazing and worked on a low rotation, it sank as low as 5 francs a year per hectare.

The causes of the low revenue in India are not far to seek,—the want of demand for the produce, the ruined condition of most of the forests, the general want of development of the country, and, more, perhaps, than any other cause, the want of good roads and means of transporting the produce from the out-of-the-way places in which they are situated.

Interest.—Interest, in connection with forestry, expresses the relation between the money value of the capital invested in the forest, that is, the value of the soil and of the growing stock, and the money invested in roads, buildings, settlements, surveys, &c., and the net annual revenue derived from the forest. Problems connected with the interest realized under various systems of working, involving the use of mathematical formulæ, although of great theoretical interest and of practical importance in countries where forestry is in an advanced stage, are of little use in India owing to the want of accurate statistical data relating to the outturn of crops of various ages. Such problems are not, therefore, discussed in these Notes.

Other technical Terms.

Necessity for defining terms used in forestry.—Before explaining the manner in which the different methods of forest treatment can be applied or prescribed, it is necessary to define the meaning of certain technical terms which it will be impossible to avoid using without sacrificing both accuracy and conciseness, and with regard to many of which we have, as yet, no recognized definitions in English. Correct definitions are the more necessary in forestry that its terms are borrowed from every-day language, and their special meanings are, therefore, the more liable to be misunderstood.

Crop.—The terms *standing stock*, *growing stock*, *tree-growth* and *crop*, all mean the collection of trees growing on a given area of ground.

Tree.—A woody plant having a single stem of considerable length, and which is capable of attaining a height of at least 25 feet, is called a tree. The term includes arborescent palms and bamboos.

Shrub—Is a plant which does not attain this height and which generally branches at or near the ground.

Evergreen tree—Is one the leaves of which persist for at least a year.

Deciduous tree—Is one which is leafless for some time during each year.

Conifers—Are trees which usually bear needle-like leaves.

Broad-leaved tree.—The term *broad-leaved tree* is used to distinguish trees which are not conifers.

Underwood.—The lowermost tier of growth in a collection of trees is called the *underwood.*

Brushwood.—The collective name of *brushwood* is given to all inferior shrubs and brush-like growth. The term also includes fallen twigs and small branches in a forest.

Herbage.—Growth which does not become woody is called *herbage.*

Windfall—Is the term applied to trees broken or uprooted by any cause, generally by the wind.

Gregarious tree—Is one which has a tendency to form a more or less extended mass of forest composed of its own species only.

Hardwooded trees or hardwoods—Comprise all trees with tough and heavy wood. The term is used in contradistinction to *soft-wooded trees,* a term sometimes applied to trees the wood of which is considered to be of little or no value.

Bole—Means the trunk or stem of a tree from the ground to the point where it divides into a series of main branches.

Crown—Means the whole collection of branches of a growing tree.

Leaf canopy—Is the mass of foliage formed by trees the crowns of which meet.

Regular and irregular forest.—The trees forming a crop may be of the same age or size or of different ages or sizes. In the former case the crop is said to be *regular* or *single-aged,* in the latter *irregular* or *of mixed-ages.*

Some recent French writers have objected to these terms *regular* and *irregular* on the ground that "regular" means "conformable to rule" The terms, however, seem to be generally accepted and understood, although "single-aged" and "mixed aged" are to be preferred.

Storied Forest.—Irregular crops may be composed of stems of all ages and sizes confusedly mixed, as in forests worked by the selection method, or of trees of different ages rising above one another, as in the case of coppice with standards. In the latter case, the crop is said to be *storied forest* from being arranged in tiers or stories.

Principal and accessory species.—In a mixed crop the *principal species* are those which, from the superior value of their produce, their abundance, or the prevailing conditions for their favourable growth, determine the method of treatment applied, and the age at which the crop is felled. The other

valuable species, well distributed throughout the forest, are called *accessory* or *auxiliary species.*

Minor produce.—All the products of a forest, other than the wood of the principal or accessory species, are usually called *minor produce.* In some cases these include bamboos.

Age.—The *age* of a regular or single-aged crop is the mean age of the trees composing it. In a crop of mixed ages the age of the class (of trees of the principal species) most numerously represented is generally taken and alluded to as the *predominant age.* In the case of storied crops the age of each tier of trees is generally given separately.

Pure and mixed crops.—The crop in a forest may consist of one species only, or of several. In the former case it is said to be a *pure crop ;* in the latter a *mixed crop.*

Density.—The *density* of a crop is the degree of proximity of the trees that compose it. This is usually expressed by stating the number of stems per unit of area, and their age.

Isolated trees and canopied forest.—From the point of view of their density, crops may be composed of *isolated trees,* or the crowns of these trees may touch, so as to form a *canopied forest.*

Complete and incomplete crop.—In every case a crop is, as regards its density, either *complete* or *incomplete.* It is *complete* when it presents a density conformable to its nature and age ; when this is not the case, it is incomplete.

Interrupted crops.—In the latter case the crop is said to be *interrupted* when it contains a number of large blanks or gaps.

Blanks—Are areas bare of trees interspersed in a forest.

Glades—Are similar areas when containing a few scattered, isolated trees.

Close, crowded or open crops.—The state of the canopied mass may also be spoken of as *close* or *crowded* or *open,* according as the lateral branches interlace or only slightly touch at their extremities.

Cover.—A plant is said to be *growing under cover*—(as opposed to its growing in the open)—when it is virtually under the crown of another tree.

Shade.—The term *shade* is applied both to the *surface of the ground shaded* and also to the action of this shade.

Suppression.—A plant is said to be *suppressed* or *under suppression* when its growth is injured by the cover of another.

Nurse.—Trees grown to protect more valuable young plants against the influences of the climate until these no longer require such protection are called *nurses.*

Seedling.—A *seedling* is a young plant which results directly from the germination of a seed.

Seedling-forest—(French "*futaie,*" German "*hochwald*") is a crop composed of seedling trees.

The term "high forest" is frequently used in this sense, but the true meaning of the French word *futaie*, of which our term "high forest" is intended to be the equivalent, is a crop composed of trees, the boles (*fûts*) of which are full grown (German *baumholtz*) This meaning is still preserved in the French term (*taillis-sous-futaie*). All crops that have arrived at this mature stage are called "high forests" in French working-plans, whether they come from stool-shoots or from seedlings; *haut perchis sur souche* is a common expression in those plans.

Such terms as *young seedling forest*, *mature seedling forest*, &c., are also used to express various stages of seedling-forest development.

Names of crops.—Forest crops have received different names according to their stages of development—

SEEDLING CROP.—From the time of the germination of the seeds to the time when the newly-developed branches meet.

THICKET.—From the time of the branches meeting to that of the fall of the lower branches.

POLECROP.—From the time of fall of the lower branches to that when the crop attains its normal height.

HIGH FOREST.—From the time of the crop having attained its normal height.

STAGES OF GROWTH OF TREES.—A separate individual is termed a *seedling* when it belongs to the first stage, and the first part of the second stage; *sapling* when it begins to lose its lower branches; *pole* in the third stage; and a *tree* in the fourth stage.

Reserve or standard.—When a crop is felled, leaving a certain number of trees standing in order that they may grow to a larger size, these trees are called *standards* or *reserves.*

Clearing.—The felling of the whole crop on a given area, whether a few standards are left or not, is called a *clearing.*

Clean felling.—If, however, no standards are left, it is called a *clean felling.*

Stool shoot—Is a stem springing from the stool or stump of a felled or fallen tree.

Root-sucker or sucker—Is a stem springing from a root.

Coppice—Is a crop principally composed of stool-shoots or suckers. There is no terminology sanctioned by usage similar to that in use with regard to high forest, to express the stages of development of coppice.

Regeneration fellings.—When it is sought to replace the existing crop by a new one, fellings made are called *principal* or *regeneration fellings.*

Improvement fellings.—When it is sought to improve the condition or constitution of the existing crop by cuttings known as restoration fellings, thinnings or cleanings, the operation is called an *improvement felling.*

Natural regeneration.—The regeneration is said to be natural when the new crop is obtained from self-sown seedlings, stool-shoots or suckers.

Artificial regeneration.—When regeneration is obtained by sowings or plantings, it is said to be *artificial.*

Names of fellings.—The principal or regeneration fellings made in connection with each method of treatment have received special names which will be described under the method of treatment to which they relate.

Method of Treatment.—The body of sylvicultural rules regulating the manner in which a forest crop is regenerated and the produce realized is termed a *method of treatment.*

Permanent methods.—A method of treatment is called *permanent* when it is applied to replace the existing crop by a new one according to a definite scheme.

Temporary or provisional methods—Are applied to change the condition or constitution of the existing crop in order that it may be treated by a permanent method.

Method of clearances or clearings—Consists in felling the whole crop (or all but a few trees which are left to grow to a larger size) on a portion of the area treated, in such a manner as to pass over the whole area once during the time that is required for trees of the species felled to attain the exploitable size. Reproduction is obtained either by natural means

from seedlings already in the ground, or from seed falling from adjacent or reserved trees, or by artificial re-stocking.

When regeneration is obtained by natural means, this method admits of several modifications, *viz*, the forest may be divided into *parallel strips* and every alternate strip exploited, the intermediate ones being left to afford shelter and seed until the whole of the first series has been exploited; or the clearances may be made in regular succession over small *adjacent areas* and regeneration obtained by natural means. With artificial regeneration large areas are usually *clean felled* and afterwards *re-stocked artificially* by sowing or plants.

The regeneration fellings made in connection with the method of clearances are called, according to the particular modifications of the method adopted, *clear fellings or clearings, strip fellings* or *clean fellings* with artificial reproduction.

Selection method—Consists in removing in a methodical manner in accordance with sylvicultural requirements, and so as not to exceed the possibility, the exploitable trees in a forest by felling them here and there, as they are found growing, either singly or in groups. As it would generally be impracticable to extend the fellings in one year over the whole of the forest treated, it is usual to prescribe the number of years in which this area is to be worked over and to divide it into a corresponding number of annual or periodic coupes, one of which is to be exploited each year or period in regular succession.

The regeneration fellings made in connection with the method are called *selection fellings.*

Storied forest method.—This consists in forming a crop, according to a pre-arranged pattern, of stems of different ages arranged in tiers, one over the other, as is seen in the reserves of different ages growing over coppice with standards. As in that method, the difference in age between the trees of each tier is equal to the length of the felling rotation. The method differs from that of coppice with standards in that regeneration is obtained principally by seed instead of by stool-shoots.

The regeneration fellings made in connection with this method may be called *storey fellings.*

Regular method or method of successive regeneration fellings.—In this method, instead of the entire crop being removed at a single operation from the area exploited, this is

removed *gradually*, in several successive regeneration fellings made from time to time, as the new growth requires less and less the shelter from the parent crop. In addition to this gradual exposure of the new growth of seedlings, these, as they grow up, are fostered by improvement fellings.

The successive regeneration fellings made in connection with this method are called *preparatory or seedling, secondary, &c., final.* The first two may be either *close* or *open.*

Group method—Is merely a modification of the regular method of successive fellings by which the parent crop, instead of being removed gradually, is felled in one operation in small groups wherever patches of seedlings are found to be established. The regeneration fellings made are called *group fellings.*

Pastoral method.—This name may be applied to the treatment of tree-clad areas of which the principal product is fodder and in which it is necessary to preserve the trees for the sake of the shelter they afford to the soil and the food furnished by their leaves. The treatment consists in ensuring the preservation of the trees either by not exploiting them at all or by felling them only as they decay, or only lopping the branches, while at the same time limiting either the number of animals grazed or the period during which grazed, or both. Regeneration fellings made in connection with this method bear the names of the method of treatment to which they belong.

Simple coppice method—Consists in clear felling a crop in such a manner that it reproduces itself naturally by means of stool-shoots and suckers. In applying this method the stumps or stools are generally felled flush with the ground, so that the shoots become independent of the parent stool.

The regeneration fellings made in this method are called *coppice fellings.*

Selection coppice method—This method (Fr. "furetage") consists in cutting periodically the strongest shoots, or those above certain prescribed dimensions, out of each coppice clump.

The regeneration fellings in this method may be called *selection coppice fellings*, but as the method is used in India in the case of bamboos only, the fellings made are often called bamboo fellings.

Method of coppice with standards.—In this method, instead of clean felling the area operated on, as in simple coppice,

a certain number of the most promising and valuable stems are reserved at each felling to grow to a larger size over the coppice. It is sought in this way to combine the advantages of certain regeneration, which is principally obtained by means of stool-shoots and suckers as in simple coppice, with the production of a certain amount of large timber.

The regeneration fellings in this method are called *storêd* or mixed *coppice fellings* when they relate to the coppice, and *standard fellings* when they relate to the trees reserved.

The branch-coppice or pollard method—Consists in lopping or *pollarding* the trees at regular intervals in rotation, often for cattle fodder or for manure for field crops. In some cases the trees are coppiced at a height from the ground of 4, 6 or more feet, in order to protect the young shoots from browsers. The fellings made may be called *lopping* or, where the whole crown is cut, *pollarding*. There is no regeneration felling properly so called. The trees replace themselves from seed haphazard and are allowed to stand until they decay.

Irregular treatment.—Forests are sometimes subjected to no regular method of treatment, such of the produce as is saleable being realized whenever there is a demand for it by allowing purchasers to remove produce under a system of permits or passes. The fellings made in such cases are called *unclassed fellings*.

Provisional treatment.—It is sometimes necessary to change the treatment which is being applied to a forest and subject it to some other method. In order to do this, it is necessary to subject the existing crop for a time to special treatment in order to bring it to the condition requisite for the application of the new method. The treatment applied in such cases is called *temporary* or *provisional*.

Conversions.—Where the new method of treatment applied involves a change in the manner by which *reproduction* is obtained, from seed to coppice or from coppice to seed, the operation is called a *conversion*.

As there are three main classes of treatment, *viz.* those in which reproduction is obtained by seed, those in which reproduction is obtained by coppice, and the mixed method of coppice with standards; in which

reproduction is obtained both by seed and coppice, there are six possible sorts of conversions—

Seedling forest to simple coppice.
" " to coppice with standards.
Simple coppice to coppice with standards.
" " to seedling forest.
Coppice with standards to seedling forest.
" " " to simple coppice.

The fellings made in connection with the different operations required in conversions are all called *conversion fellings.*

Transformations.—Where it is simply sought to change the method of treatment applied to another of the same class, without altering the manner in which reproduction is obtained, the operation is called a *transformation.*

Thus, it may be sought to treat a seedling forest worked by the selection method as storied forest or as regular high forest by the method of successive regeneration fellings, &c.

The fellings made in connection with transformation are called *transformation fellings.*

Restorations.—It is frequently necessary to improve the condition of the existing crop or to reconstitute the forest capital by cutting out ill-grown or injured species, injurious climbers, &c., without altering the method of treatment or the mode of reproduction. The treatment temporarily applied in such cases may be called a *restoration*, and the fellings *restoration fellings.*

This operation is a very common and necessary one in Indian forestry, but hitherto such operations, called by the name of *improvement fellings*, have not generally been carried out with a sufficiently precise purpose or with a view to the restoration of the capital according to a definite scheme within a fixed period. The name "improvement" applied to such fellings is also too vague, as this includes all felling operations, such as thinnings and cleanings, tending to improve the condition of the existing crop.

Thinnings—Is the name applied to the operation of removing the superabundant stems from an immature crop in order to give the stems of the future more room for growth. The fellings made in this operation are called *thinnings.*

Cleanings—The same operation when applied to a younger crop is called *a cleaning.*

Weeding—Is the name given to cleanings when carried out in very young crops. This operation frees the heads and leading shoots of the principal species in the crop.

Working Circle.—In order to prescribe definitely the working of a large forest area, it is necessary to separate those portions that require different treatment, or that it is desirable, from the nature of the demand for the produce, to exploit separately. Such subdivisions of the area dealt with are called *working circles.*

By *working circle* is thus understood an *area, subjected to one and the same method of cultural treatment, which it is determined to exploit separately under the provisions of the Working-Plan.* The area dealt with in a single Working-Plan may obviously include several such circles.

In each working circle,—

(1) The method of treatment is the same throughout the entire area.

(2) The boundaries are, as far as possible, natural ones.

(3) The size depends on the nature of the treatment and administrative facts.

(4) Each circle is included in a single charge, and does not extend over two Ranges for instance.

NOTE.—The correct subdivision of a forest area into working circles based on sound common-sense principles is in India more than half the plan. This has to a great extent been lost sight of in the plans hitherto made.

BLOCK.—In order to arrive at the treatment required it is generally necessary to make a complete inventory of the stock in the forest and to record its condition. In order to do this with any degree of accuracy it will be necessary, if the area is large, to subdivide it into smaller portions, and to describe each of these separately. The subdivisions chosen are, for convenience and simplicity, generally *natural* ones, that is to say, either differing from one another as regards situation (for instance on different slopes of a hill-side or valley, or on opposite sides of a road or river) or different in some permanent character of the vegetation, as in the case of forests composed of different species or occupying a distinctly different class of soil, &c. The lines of demarcation of such areas thus form the skeleton, so to speak, of the forest, and are permanent or natural land-marks. Such natural subdivisions, generally bearing local *names*, are called *blocks.*

It will, however, often happen in India that, owing to the forest not being opened out, such subdivisions of the forest cannot be formed without cutting artificial lines through the jungle. In this case the working of the forest under the Working-Plan in course of preparation

will necessitate the laying out of new roads or paths for the extraction of the produce, and the lines that it is proposed or considered likely that these new roads should follow should be utilized as the boundaries of the blocks.

Coupe.—The area felled over, or that is to be felled over, in one year or period is called a *coupe*. A coupe may extend over several blocks or a block may include several coupes. In all cases integral portions are indispensable. Each coupe may include several compartments.

Compartment.—The crop in each block or natural subdivision would not, of course, be uniform as regards its composition, and, where an exact inventory of the crop is required, it will be necessary to further subdivide each block (for the purpose of making this analysis only) into smaller areas as far as possible homogenous as regards soil and composition and age of the crop. These subdivisions of blocks are called *compartments*. It should be clearly understood that they are temporary only, and that they should not, as a rule, be marked off permanently on the ground, although it may be necessary to show them by dotted lines on the map.

Most of the Working-Plans hitherto published in India have been unnecessarily complicated by the way in which the forests have been permanently subdivided into more or less minute compartments (so called).

CHAPTER II.

PRELIMINARY WORK IN CONNECTION WITH THE PREPARATION OF A PLAN.

Reconnaissance of the area.

Selection of the area to be dealt with.—The area under forest management in a single locality generally includes separate forests requiring different cultural treatment and not infrequently forests of different *classes*,—Reserved, Protected or Unclassed,—each, perhaps, demanding a different system of management. All these areas have, however, many points in common: they ordinarily supply the same population or market with forest produce, the labourers come from the same locality, the lines of export for all are often the same, and the management and working are supervised by the same establishment. It is, therefore, generally advisable that the organization of the whole area of Government land under forest management *in one locality* should be carried out simultaneously and be dealt with in a single Working-Plan Report.* Generally speaking it will be convenient to deal with the whole area of a single executive charge, the Range, or, where the organization is incomplete, with an area likely in the future to form a single Range. It may be necessary in some instances to deal with the forests in a portion of a Range, but in no case should the provisions of a single Plan extend over several Ranges.

Although there used formerly to be some difference of opinion on this point in Europe this is no longer the case. Formerly in France each forest estate bearing a distinct name, either because of its situation or its origin or the manner in which its ownership was acquired by the State, was separately organized in a Working-Plan of its own. It thus sometimes happens that separate Working-Plans have been framed for adjacent State forests in the same division or range, and, inversely, there are instances in which a single Working-Plan deals with forest areas in perfectly distinct charges. Recently, however, the tendency in France has been to adopt the practice followed in Germany, where the whole forest area belonging to the State or other one proprietor

---

* The term "Working-Plan," it should be remembered, is used here in the sense explained at the beginning of these Notes as meaning "Working-Plan Report," and not the special regulation which is drawn up separately for each *Working Circle* into which the area dealt with in the Report is subdivided.

included in a single executive charge (that of a *Revier förster, Ober förster, Forst meister*, &c., equivalent to our Ranger) is dealt with in a single Working-Plan.

In India, up to the present, no uniform Plan has been followed in this respect. In many cases each *class* of property (Reserved or Protected Forests) has been separately organized in distinct Working-Plans, and in some cases even areas burdened with rights have been omitted from the Plan. In very few cases has, what is now, practically, the European system of making the executive charge the unit, been followed.

Information to be collected.—The area to be dealt with having been decided upon, the next step in the preparation of the Plan is to explore this area so as to gain a general knowledge of the configuration of the country, the distribution and composition of the forests, the marketable products they contain and the best mode of disposing of them, and all other facts which are likely to be useful in deciding on the plan of management, as in the following summary :—

General Description of Tract.

Name and situation of the area dealt with.—(Civil District, Forest Division, &c.)

Configuration of the country.—(Flat, hilly or plateau; altitude; prevailing aspects, &c.)

Rock and Soil.—(Geological formation; underlying rock; general characters of the soil in connection with its effects on forest growth.)

Climate.—(Temperature, mean and extreme, with its effect on the forest growth, rainfall, periods of drought and rain; prevailing winds, storms, other climatic effects that influence the forest treatment.)

Population.—(Numbers and condition; agricultural customs which should influence the system of forest management.)

The Composition and Condition of the Forests.

Distribution and area.—The distribution of the forests; their area; areas under forest, grass, streams, &c., in each class of forest; enclosures within the boundaries; maps available, their degree of accuracy, &c.

Boundaries and boundary marks.—Nature and state of repair of the marks used; enclosures and their boundaries; whether a revision of the boundaries is required or not.

Legal position of the forests.—Brief history of their acquisition by Government and settlement where there has been one; Act and section of this Act under which gazetted, &c.

Rights.—Their origin and general character; statement of the areas burdened with rights and free from them; summary of rights to produce; privileges or other concessions granted by Government.

General description of the forest crop.—Composition and condition of the crop; types of forest and areas occupied by each; relative proportion and importance of each of the principal species; density of the crop, blanks and glades; state of reproduction; origin of the crop; the principal species, habitat, mode of reproduction, size attained, rate of growth; most suitable treatment; products yielded; grass and other minor products, &c.

Injuries to which the forests are liable.—Causes of injury; fires, grazing and other offences of common occurrence; the best means of combating these causes of injury.

System of Management.

Systems of management.—Past systems of management; their defects; changes introduced and their results; management in force and its results; regulation of fires, grazing, rights, &c.

Works of improvement undertaken.—Nature of works; their object; results attained.

Past revenue and expenditure.—A summary of the revenue and expenditure for the past ten years, if figures available, for each class of forest if possible.

Utilization of Products.

Marketable products.—Yield of timber, fuel, minor produce, &c., quantities consumed in past years by Government, by purchasers, by right-holders, and by free grantees; value of products consumed.

Extraction of the produce.—Export roads or rivers leading from forests to markets; their adequacy and state of repair; manner and cost of extraction; road improvements required.

Markets.—Distance, size and importance of the principal markets; produce consumed at each market and ruling prices obtained suggested.

Net value of produce.—Net value in the forest of each class of produce.

Miscellaneous Facts.

The forest staff.—Strength of staff and its adequacy.

Labour supply.—Abundance or reverse of the labour supply; seasons when available; cost of labour.

The Working-Plan officer should record the information that he collects on all the above points from day to day in a bound book—which should not be taken into the forest—arranged with proper headings, leaving a few blank pages under each. It will be seen that a good deal of the information required must be obtained from the records relating to the forests The Working-Plan officer should go on the ground armed with this information.

Maps.—The map used in preparing the Working-Plan should be on a sufficiently large scale to show each block or compartment (where compartments have been formed) and coupe distinctly (*see sketch appended*). A scale of 4 inches to 1 mile, in which an area of 40 acres on the ground would cover one square inch of the map, is the largest scale that is generally required in India. Where a map on a larger scale is necessary in order to delineate graphically the composition and condition of the crop in an area which is to be subjected to special cultural treatment, an enlargement of the 4″ map will be sufficiently accurate; quite as accurate as any description of the crop that can be made. In such a case it is not a map in the ordinary sense, but a *picture* that is wanted. The map used should show, in addition to the boundaries and boundary marks of the forest, the natural features of the country dealt with, hills, crests of ridges, valleys, watercourses, &c., as well as all roads, paths, fire-lines, &c. In the absence of such a map, a sufficiently accurate one may sometimes be compiled from existing village maps. In default of this it will generally be advisable, before attempting to frame a Working-Plan, to make a rapid survey or a sketch map of the area on such a scale and with such accuracy as may be deemed necessary.

The cost of preparing maps, based on a trigonometrical survey, on the scale of 4 inches to a mile comes to about ₹70 to ₹100 a square mile. The money yield of even the timber-producing forests in India does not, as a rule, justify a higher expenditure than this on surveys. Maps on a scale of 8 inches or 12 inches a mile, such as have sometimes been recommended, would cost, if the details were filled in with a proportionate degree of care, about ₹400 or ₹500 per square mile. Those who have recommended maps on this scale were probably unaware of this, or that in European countries large scale maps are, as a rule, solely used as legal documents in connection with the record of the boundaries and not for working the forests.

Choice of the Method of Treatment to be applied.

Subdivision of area into sections requiring different treatment.—It is important that the general treatment to be applied to each different section of the forest requiring different treatment should be determined at the outset, because the nature of the subsequent operations, such as the enumerating the stock, &c., to be carried out depends on this. The decision arrived at can, of course, be afterwards rectified, if necessary, when making the detailed examination of the forest, just as the working circles can be altered.

Choice of the methods to be applied.—The treatment to be adopted depends on economic and administrative facts as well as, and some times more than, on sylvicultural ones (which it is not within the scope of these notes to deal with), and the choice of the treatment is generally restricted by easily ascertained facts of which the nature may be gathered from the following remarks with regard to each of the principal methods.

Forests to which *the simple coppice method* is applied can only furnish wood of small size, for the most part only fit for fuel. Where the demand for this is sufficient, and other circumstances justify the application of the method, it can be adopted. It is exceedingly easy to apply and to work.

Hitherto the *coppice-selection method* has only been applied to bamboo forests in India. There do not appear to be any good grounds for extending its application to other classes of forest.

The *branch-coppice* method must not, of course, be applied in areas set aside for the production of timber, but it is useful under certain circumstances, as, for instance, where fodder is more valuable than wood, and, in some cases, for furnishing a regular supply of small fuel and leaf fodder in forests worked for local use.

It may also be employed in some cases in connection with the pastoral management of grazing areas.

The method of coppice with standards is admirably adapted to the circumstances prevailing very generally in the plains of India, and ought to be more largely made use of than it is. It meets, generally better than any other method, domestic requirements in small fuel while, at the same time, furnishing a considerable amount of timber of large dimensions suitable for the manufacture of implements and furniture.

The reserved trees grow quicker than in high forest, and many species which it is difficult to regenerate or to cultivate as high forest can be grown with ease as standards over coppice. The method has also this advantage in a country where a fluctuating or uncertain demand is the rule, that the timber in the reserves can be felled in greater or lesser quantities as it is required, or allowed to grow to a larger size without disorganizing the working, while the Working-Plan itself is exceedingly simple in its arrangement, both easy to understand and to apply. As regeneration is principally obtained by means of coppice, it can only be applied, at least as regards the underwood, to broad-leaved species. The whole of the produce must be saleable to make it profitable.

Toungya cultivation, it need hardly be said, should only be permitted where there are forest tribes who live by *toungya* clearing or jhooming. It is rather a manner of organizing cultivation, so as to do the least harm to the forest, than a method of treatment, but it can be turned to useful account in enriching the forests with valuable species of trees, where the necessity exists for allowing jhooming, and it may possibly be some day combined with forest treatment so as to form a regular method.

Where the whole crop is saleable and in climates where natural reproduction is assured, the *method of clearing or clean felling adjacent areas* may be applied in certain cases for the sake of its extreme simplicity, and the order it introduces in the fellings. It should not, however, be made use of where the working circle and, consequently, the *coupes* are very large, as it leaves reproduction to chance, and the larger the coupes the smaller this chance.

Like the preceding, the *method of clean felling with artificial reproduction* requires the whole crop to be saleable. The climate should also be one in which artificial restocking can be successfully undertaken with certainty of success, and the supply of labour is abundant and cheap. It should not as a rule be attempted under other circumstances or where reproduction can be secured by natural means.

As in other clearance methods *the strip method of clearances* can only be applied where the entire crop is saleable. A special objection to the strip method is, however, the cost of laying out the strips. Unless this is well done and the strips permanently marked off in advance, there is apt to be confusion, and the work demands a good deal of time and

attention from the staff. The method is unsuitable in badly stocked areas or in hilly broken ground.

The *storied forest* method is adapted to coniferous forests where the coppice method cannot be applied, or where the uncovering of the soil leads to a dense undergrowth. It is exact and well-defined, and it leads by easily understood methods to the immediate reconstitution of the capital. It also has the advantage of furnishing a supply of material of all classes and sizes. It is a question, however, whether it could be adapted to a mixed crop in which only one or two species were saleable.

The selection method of working, formerly represented as barbarous and unscientific, is the only method at present of exploiting the great majority of our Indian forests in which only one or two species growing in a mixed forest are saleable. The prescriptions necessary in order to apply it are simple and it is adapted to the restoration, without the aid of expensive works of artificial reboisement, of the irregular and ruined forests so frequently met with in India. Its drawback is that, as only a portion of the material standing in the coupe is felled, a large area has to be worked over at each operation, so that the extraction of the produce is expensive, but this must always be the case where only one or two species in a crop are saleable. The selection method adapts itself to almost any system of culture, or to the special requirements of any crop or species. For instance, the cover can be removed from the seedlings by successive fellings gradually or at once as in the regular or uniform method or in the group method.

In order that a forest area may be treated by the *method of successive fellings*, it is necessary that it should contain a properly graduated series of crops of different ages, mature high forest, pole crops, thickets, &c., in compact blocks, each class occupying nearly the same extent of ground, and that these crops should succeed one another in regular order on the ground. Such a condition of things does not at present exist in any forest in India, and can only be produced by subjecting the area to transformation fellings during a lengthy period. But the chief drawbacks to the employment of the method are, perhaps, that it is complicated and requires a large staff of trained Foresters to apply it successfully. Different classes of fellings, each requiring to be executed with a considerable amount of skill, have to be carried out simultaneously in all parts of the area treated;

principal regeneration fellings in one part, selection fellings in another, cleanings in another and thinnings in another. It also fails in one of the chief objects of a Working-Plan, in that it does not tend (unless where the modified method is adopted) to introduce order in the fellings. The regeneration fellings are prescribed by volume which alone involves a laborious and costly calculation of the contents of the crop extending over a large area, and are carried out anywhere in this area wherever required. The method can only be employed where all the produce of the forest is saleable, and it is also unsuitable where reproduction is very slow or difficult to obtain, as at high elevations and in very dry climates. In fairly moist climates in the plains, it might be applied in those cases where the demand for the produce is sufficiently great and profitable; but in such conditions the method of coppice-fellings would probably prove to be more suitable.

The above remarks apply also to the modification of the above method known as *group method.*

It will be seen that in determining the method of treatment the chief points to be noticed are:—

(1) The composition, sylvicultural requirements and condition of the existing crop.

(2) Reproduction, how it can be obtained, by seed or coppice.

(3) The demand for the produce.

Formation of the Working Circles.

Rules regarding the selection of circles.—The reconnaissance completed and the general method of treatment adapted to each section of the forest area determined, the working circles may, subject to such subsequent modifications as a more detailed examination of the crop show to be necessary, be decided on.

Each working circle forms a separate centre of supply and a unit of administration, and may, where possible, constitute a separate charge. Very often, as for instance where there are large forest masses—such as the teak forests of Burma or the deodar forests of the Himalayas—subjected to the same method of treatment, the formation of working circles depends entirely on administrative facts, and presents no difficulty. But where there is a local demand for the produce, requiring a continuous supply

near at hand, in several different centres of consumption, or, where the nature of the crop varies very much from place to place, it will be necessary to form a number of comparatively small working circles, which cannot be formed into separate charges. This is especially the case with regard to coppice forests, the principal product of which, fuel, cannot bear the expense of carriage to a long distance. Local grazing rights or privileges also play an important rôle in determining the areas to be formed into separate circles, as the closings and openings to grazing of blocks often determine the cultural treatment.

Whatever boundaries are taken they should be natural ones. Artificial lines cut through the forest should be avoided. Water-sheds (in the hills), roads, boundaries of forests, or of forest blocks form the most convenient boundaries of working circles both from an administrative and cultural point of view.

As regards the *size* of working circles, where this is not determined by the circumstances already described, no very definite rules can be laid down. If small, the number of separate circles, and consequently of separate fellings or other operations, becomes inconveniently great and the work scattered. This may be objectionable from an administrative point of view. The size is obviously closely connected with the size of the annual coupes which in its turn depends on the demand for the produce; as more produce than is saleable should, as a rule, not be felled. If the circles are too large, the area to be exploited in one place or at each operation may also become too large, and the distance to which the material has to be conveyed too great, or more material may have to be felled than can be consumed in the centre of consumption to which this material has to be carried. A happy medium should, therefore, be chosen. Generally speaking, where all the produce of the fellings is saleable, the working circles would be comparatively small. Where, however, only one or two species, which grow scattered in a mixed crop—like deodar in most of the Himalayan forests, teak in Burma, &c.,—are exploited, the size of the working circles is necessarily very large.

It should, however, be remembered that where equality of yield from year to year is a desideratum, this is more likely to be accomplished by forming a number of small circles than one or two large ones.

Although each working circle is subjected to only one

series of *principal* felling operations, several separate series of minor operations made in connection with one method of treatment may be carried out in a single working circle.

For instance, in a single working circle worked by the method of successive fellings and thinnings, selection fellings would have to be carried on in one block, thinnings in another, and so on. But in this case the principal or regeneration fellings would, in time, pass over the whole area, and the minor operations would be made with one common object in connection with these fellings under one and the same method of treatment. In some cases, as for instance, in exploiting bamboos or cutch trees in the teak forests in Burma, a series of operations under one plan of work may have to be carried out in a number of working circles formed under other plans.

Analysis of the Crop.

Subdivision of the area.—In order to describe the composition and condition of the forest crop, which is the next step, it is necessary to subdivide the area of each working circle into smaller areas or blocks bounded by natural limits, and possibly into compartments or culturally homogeneous units. The size of the blocks is important, but no very precise rules can be laid down with regard to this as it depends on the nature of the work, and the minuteness with which, in view of the treatment, it has to be marked out. To a certain extent the size is of course decided by existing facts, the different portions of the forest having natural limits vary in size, and the different crops are found extending over large areas or small. But it is always open to rectify this to some extent by grouping or subdividing, as the case may be, the existing divisions. If the divisions are small, they become too numerous and the result is confusion in the plan and a tedious number of separate descriptions. On the other hand, if they are too large, the inventory of the forest is vague and unsatisfactory.

Detailed description of each subdivision.—The work of describing the areas into which the forest is subdivided should proceed simultaneously with the subdivision itself. The degree of minuteness with which this description should be compiled depends, just as does the subdivision of the area, on the method of treatment adopted, and on the object in view.

The description required may, therefore, vary from a broad general description of the crop in each block accompanied by a statement of the results of the enumeration survey, when

such has been made, to a detailed description, separately, of the situation, soil and standing stock in each compartment into which the blocks have been differentiated.

The work requires trained observation and a good deal of walking, but does not call for any involved process of reasoning. It is necessary, however, that the Working-Plans officer should always have his eyes open so that no fact may escape his observation. He should not, therefore, attempt to do more work at one time than can be accomplished without bodily fatigue.

The situation.—The situation includes the relative position and elevation, as well as the aspect and slope. As regards *elevation*, the absolute height above the sea-level should be noted generally for the forest, but the *relative height* as compared with the surrounding country, together with the absence or presence of sheltering land, is of more importance as regards particular blocks or compartments, and this should be noted. Thus the upper portion of a slope may require very different cultural treatment from the lower portion, although the difference of level above the sea may be slight:—for instance, the former may be on the top of a ridge and the latter at the bottom of a valley. The *aspect* should always be given where well defined, but in hilly ground it often happens that a single block faces several points of the compass. The *slope* may be stated in a single word. A slope is said to be *gentle* when the inclination is not greater than about 1 in 6; it is *steep* when more than 1 in 6 but not greater than 2 in 3; it is *very steep* when more than 2 in 3, and becomes *precipitous* when it reaches 1 in 1.

The soil.—The more important facts with regard to the *soil* may be expressed in a few words, descriptive of the state of its surface, its composition, its physical state, its depth, and its fertility. The fertility or productive value of the soil as regards the species which has to be considered may generally be summed up by such terms "good" or "very good," "bad" or "very bad," as the case may be. With regard to its *surface* the soil may be quite bare and hard, or covered with a layer of leaves or needles, or with vegetable mould apt for the reception of seed, or it may be carpeted over with moss or grass, or over-grown with bushes. The physical character of the soil—its looseness and the size of the particles forming it—are, however, of greater importance as regards forest vegetation than its chemical composition. We may have stiff clay or loose sand or agglomerations of stones and boulders, while as regards its hygroscopicity, this may vary

from marshy to dry. But of all the characters of the soil, *depth* is perhaps the most important, and is that which is most likely to vary. Depth of soil is at once manifested by the appearance of the trees. In shallow soils the boles are generally short and the crowns low, while the contrary is the case in deep soils of from 12 to 20 inches deep and over.

The nature of the underlying rock and sub-soil is often of great importance; it should especially be explained whether this is permeable to the roots or not.

As, with a few exceptions, very little is known as yet of the influence of different soils on the growth and production of the various species of Indian forest trees, it is not often that a description of the chemical characters of the soil can be of much service. But where a detailed plan can be prepared, the nature of the soil in each compartment should be noted, and the relative proportions of the clay, sand and lime roughly ascertained. By noting this, many valuable facts can be deduced, especially when a complete record of the productions for a number of years has been kept. Small portions of the soil, it is wished to examine, should be taken from *several different spots* in the nursery or compartment under observation and mixed together, a small portion of this should then be reduced to powder in a mortar and the vegetable detritus removed by heating. The clean soil should then be dissolved in dilute by hydrochloric acid, and the insoluble portion consisting of clay and sand, separated from the soluble portion, which contains calcium, iron, &c., by filtration. The clay can then be separated from the heavier sand by decanting several times with the aid of syphon and the relative proportion of each determined by weighing. If, when the hydrochloric acid is first added, there is a *brisk* effervescence, the soil is calcareous. The quantity of lime present can be approximately ascertained by deducting the weight of the insoluble clay and sand from the weight of the mass before being treated with the acid.

The crop.—The composition and condition of the standing crop must necessarily be examined with the greatest care. The minuteness with which this inventory should be made depends, as already explained, on various circumstances, but where a complete inventory is required, the following points should be considered, *viz.* :—

(1) General character of the crop.
(2) Component species, or different types of crop, and their relative proportions.
(3) Age; density; state of growth; proportion of unsound trees.
(4) Natural reproduction; presence or absence of seedlings or stool shoots.
(5) Origin and past management.
(6) Most suitable treatment.

The character of the crop.—Where it has been necessary

to differentiate each block into homogeneous units or compartments, the character of the growth should be explained by its descriptive name in a single word or term, such as "thicket," "irregular mature seedling forest," &c, &c. Where, however, the subdivisions are natural ones and the crop irregular, a more lengthy descriptive title is necessary.

With respect to the *component species of trees*, only the principal and, sometimes, secondary species need be mentioned, and, where necessary, their numbers or relative proportions, but this always in the most simple manner possible. Frequently it is sufficient to state whether species other than the principal ones are abundant or rare. Numerical ratios may be misleading, as for instance, when there are a large number of injured or unsound trees, or where the species are very irregularly distributed. Species of minor importance need only be mentioned collectively if they are abundant or rare, or when these are characteristic of the soil or state of growth, or if confined to certain compartments only. Where there is more than one stage of growth, as in coppice with standards, each should be separately described.

As regards *age*, if the crop is composed of two or more distinct classes, the respective ages of each should be given. If the crop is irregular, the *dominant age* should be stated.

The *density* of the crop is described by stating whether the leaf canopy is complete or not, *close*, *open*, or *varying* &c., &c.

The state of growth can generally be explained in a few words, such as active or slow, &c., but the *condition* of the crop, and such facts as the proportion of unsound trees, the probable time during which the trees will continue in good condition, &c., sometimes require to be specially explained.

At times it may be possible to note the *origin* of the crop. As a rule, its history cannot be traced very far back; but in any case it is expedient to mention what operations have been last carried out. Where fires, grazing, &c., have caused serious damage, which has left its traces in the crop, this should be stated and the effect noted. As a rule, there is peculiar to each crop, as to each forest, some special characteristic. If this is not observed and noted, the descriptions of the compartments, however lengthy and carefully drawn up, will be deceptive.

Lastly, it is useful to note the future treatment required or the cultural operations that might be usefully executed in the immediate future. It does not necessarily follow that

such operations will be carried out. This will depend on various considerations, which will be discussed in organizing the forests considered as a whole. But such notes are of great use when the plan has to be prepared.

Example of a description of a block :—

Name of Block :—*Dalnur.*

Area :—313 acres, of which 6 acres blank, and 10 acres unproductive rock.

Situation :—On the western flank of the great Maura Dhar. Aspect westerly, but on minor spurs northerly and southerly aspects also represented. Gradients steep, in places precipitous. Elevation from 6,500 to 8,000 feet; sheltered from west.

Soil :—Rich loam well covered with mould, generally deep except near summit where underlying rock of black limestone crops out; good soil for deodar.

Stock :—Irregular mixed crop. In the upper part *kharsu* oak with a few blue pine, spruce, maples and, rarely, deodar. Lower down deodar becomes the chief tree with spruce and silver firs. All ages are represented, but most of the trees are mature or, especially in the higher and less accessible places, over-mature. The density is varying, good on whole, but numerous small blanks occur. Reproduction fair, numerous small thickets of deodar with scattered seedlings of spruce and other species. The aggregate area fully stocked with deodar is about 200 acres.

The only treatment in the past has been protection from fire. The best trees in the most accessible places were felled some years ago.

The enumeration of the trees gave—

Unsound over-mature deodar	. . . .	208 trees
Sound deodar over 2′	. . . .	509 „
„ 1½′ to 2′	. . . .	693 „
„ 1′ to 1½′	. . . .	372 „
„ below 1′	. . . .	2,608 „
„ spruce over 2′	. . . .	309 „

Remarks.—The removal of the over-mature and exploitable trees urgently required in the interests of the younger stages of growth. The re-stocking of the blanks may be left to nature.

Stock maps.—Detailed descriptions of forest crops are tedious to write, and in the case of a large area, bulky and unwieldy when written. Moreover, it is very doubtful if any one ever derives much benefit from even the best descriptions that can be compiled for the large areas dealt with. The Working-Plans officer, with the aid of the map and area statements, forms his working circles, and determines his method of treatment more from the picture of the various crops left in his mind from their inspection than from any written description, and as regards those officers who, unacquainted with the areas to which the descriptions relate, have

to scrutinize the plans based on them, the human mind is incapable of grasping all the details and forming a mental picture from such a mass of writing as usually accompanies an Indian Working-Plan dealing, as it necessarily does, with a vast area. It is, therefore, a question whether it would not be better to abolish these written descriptions entirely from our Working-Plans and to replace them —in addition to the broad general descriptions of the forest or each type of forest as a whole—by *stock maps.*

To prepare these it will, in most cases, be sufficient to distinguish each class of forest by a flat wash of distinct colour and the age by tone, the darker the tone the older the crop, or a system of ruled lines may be used, different species being represented by different colours, density and completeness by the closeness of the lines, age by their length, seedlings being shown by small dots.

In an article which appeared in the *Revue des Eaux et Forets* for the 10th June, 1890, Monsieur Marcel Volmerange writes as follows on the subject of such maps:—

"One of the most troublesome portions of a Working-Plan report is the description of the compartments. This requires much minute care on the part of the writer as it does steady attention on the part of the reader, and after all it is extremely difficult from a perusal of it to gather any idea of the forest in its entirety.

A graphic representation of the nature and composition of the forest would probably give a better general idea of its condition and contents and could be prepared with far less trouble.

Such a method would consist in showing on a sketch map the principal factors of the crop by conventional signs, different colours being used to show the species of trees, such as the following for example:—

Seedling crop	o	o	o	o	o	o	o	o	o
Thicket of saplings . . .	o	o	o	o	o	o	o	o	o
Pole crop	+	+	+	+	+	+	+	+	+
Young high forest . . .	×	×	•	×	×	×	×	×	×
Mature high forest . .	—	—	—	—	—	—	—	—	—
Over-mature or decaying high forest,	=	=	=	=	=	=	=	=	=

Complete crops might be indicated by a continuous line.

These conventional signs, or such others as might be preferred to them, could be used in various combinations, and would thus enable the composition of the forest in each compartment to be shown with whatever degree of accuracy or detail desirable, and a general idea of the forest as a whole could be gained from a simple inspection of the map.

In order to complete the description, a few lines would be sufficient to explain the nature of the soil, unless it was thought practicable, and not too difficult, to show also the quality of soil by a similar method of the conventional signs and colours.

It would also prove interesting after the lapse of a certain number of

years to make a new map, using similar signs, which, by comparison with the old map, would at once show the alterations and improvements in the condition of the crops and would facilitate the determination of the changes required in the treatment."

Colonel Wilmer, of the Survey of India Department, in surveying the forests of the Central Provinces recently made use of such a system as the above at the instance of Mr. Mackenzie, the Chief Commissioner. Colonel Wilmer describes his system as follows:—

"The classification of forests and soils was adopted and carried on at the same time as the original detail survey was made, the former by the *colours* of lines used for shading, and the latter by the *direction* of the lines. The classification was shown on tracing cloth by symbols as follows:—

The forests were divided into five classes, *viz.*:—

1. Forest where teak abounds without bamboo . . .	*Carmine.*
2. Ditto ditto ditto with bamboo . . .	*Blue.*
3. Miscellaneous forest	*Brown.*
4. Grass lands	*Green.*
5. Cultivation	*Yellow.*

Soils were divided into four classes, *viz.*:—

1. Very good and rich	*Lines drawn vertically.*
2. Medium	*Do. horizontally.*
3. Very dry	*Do. diagonally from N W to S-E.*
4. Unproductive	*Do. do from N.-E. to S-W.*

Each Sub-Surveyor kept an outline trace of his daily work on a piece of tracing cloth, and also made notes of the nature of the soil and class of forests that he met with At the end of a few days, when sufficient detail survey had been completed, he coloured up the portions and marked them with lines according to the fixed symbols. This trace the Sub-Surveyor kept going until his work was done, and it was examined at the same time as the topographical detail. Some differences of opinion were found at the adjoining edges as regards nature of soil; more especially between the 'medium' and 'very dry', but these were reconciled.

On compiling the different Plane Table Sections into Standard Sheets, it was found that laying colour on to the tracing cloth spoilt it and rendered it opaque. The plan of drawing in the lines in their proper colour and direction was then adopted, and was found to answer all purposes, whilst the tracing cloth was kept clear and smooth."

In recording, on an already prepared map, the nature and composition of the crop or soil, it may often be useful to make use of enlarged maps. Such maps are sufficiently accurate for this purpose.

Valuation Surveys.

When required; methods in use.—In many cases as, for instance, where the possibility is expressed in area, a description

of the crop is all that is requisite. But where the possibility is expressed in trees, or by volume, as in some cases in the selection method, an enumeration or estimate of the number of trees is necessary. An enumeration accompanied by an estimate of the cubic contents of each tree is also necessary in order to prescribe the principal fellings in a forest worked by the method of successive fellings. In such cases the complete analysis of the crop is not complete until the enumeration has been carried out.

The material in the standing crop may be ascertained either—by *complete survey*, that is to say, by counting and measuring the individual trees on the whole area, or—by *sample plots or lines*, that is to say, by counting the individual trees in small pattern areas of known extent selected in each block or in each type of forest or in lines of known width running through the forest, and by means of simple proportion, deducing from this the number of trees in the whole area.

Choice of a method.—Which of these two methods should be adopted depends on the circumstances of each case. Obviously the most correct method is to count and measure each individual tree in the crop. But this involves the expenditure of so much time and labour that, except where a very accurate plan is required and is justified by the high money yield from the forest, it is generally best not to employ it, except where, as frequently happens, only one or two species irregularly distributed in a mixed crop are saleable, and the plan is to provide for the working of those species only. In such cases the cost is not so high and the result obtained from countings made over sample areas is unsatisfactory.

The chief points which should determine which method should be adopted may be summed up as follows:—

The purpose of the survey and the degree of accuracy demanded in the plan.—It may be only necessary to know the average production per acre so as to calculate the yield in the manner described in the selection method It is not always necessary or profitable to attempt to calculate the material on the ground with extreme accuracy, and in any case even the complete enumeration and cubage of each individual tree cannot ensure the complete accuracy of such a calculation.

The nature of the crop.—Sample plots should be avoided in the case of very irregular crops, in very open crops, or in

crops containing only scattered trees, such as the standards reserved over coppice, and in the case of selection-worked areas, in which only one or two species growing scattered in a mixed crop are exploitable and have to be enumerated. Also in the case of very small areas it would not be accurate to make use of pattern areas, as there would be no average.

Method of sample plots; selection of the plots.—Where the conditions are such that the method of survey by sample plots is justifiable, separate plots should be taken in each distinct type of growth, and these should be chosen so as to fairly represent the average conditions of the crop or particular type of growth of *which it is taken as a pattern.*

In some cases it may be more convenient to make use of sample lines taken at regular intervals through the forest. Where there are mixed and variable crops, the position of the lines should be traced on the map on which the limits of the different types of forest are shown, and the results should be calculated separately for each crop through which the lines run. The width of the lines should be taken so as to be convenient for purposes of calculation.

Thus a line 1 chain *broad* would represent 0·1 acres per chain's *length*, and, if the type of forest through which the line led was found to measure, say, 6 acres, while the length of line leading through this type was, say, 9 chains, the number of trees could at once be found as follows:—

$$\frac{\text{number of trees in crop of 6 acres}}{\text{number counted on 9 chains of line}} = \frac{6 \text{ acres.}}{0{\cdot}9 \text{ acres.}}$$

The following rules* should also be observed :—

(1) No sample plot should be selected on the edge of a crop, for a true average will seldom be found there.

(2) On slopes presenting a wide range of elevation or in crops offering a great variety of aspects and soils, several sample plots judiciously distributed should be selected.

(3) The form of the plots should be regular, in general the best shape is that of a long rectangle.

(4) The aggregate area of the sample plots should not be less than 5 per cent. of the total area of the crop or type of growth of which they are chosen as the pattern.

Treatise on the mensuration of timber crops. Translated from the German by Mr. Carter and published in the "Indian Forester" for 1889.

(5) In mature crops no sample plot should usually be less than 3 to 5 acres in extent, but in no case should the area be less than one acre, except, perhaps, in young uniform crops.

(6) In crops of large extent several plots should be taken and not one large plot.

Size-classes of the trees enumerated.—Whether we count the trees on the whole area or only on portions of it, the number of trees to be measured is so great that it is not practicable to record the correct diameter of each individual. Trees of more or less the same size are, therefore, grouped together in girth (circumference) or diameter classes.

Where, as often happens, timber is sold by, and tables are prepared for, *girth* measurements, the classification might with advantage be by *girths;* the calipers used being marked so as to record girths, not diameters.

The range of girth (circumference) or diameter included in each class should vary with the degree of accuracy sought and the size attained by the trees themselves. In very accurate and minute surveys, a range of diameters as low as from 1 to 2 inches for large trees and of ½ an inch to 1 inch for small trees is sometimes taken; but such minute work is generally out of place in India, where a range of from 6 to 8 inches in diameter can usually be employed with advantage. Theoretically, the height ought also to be taken into account in making this classification, as this, even more than the diameter, is influenced by the factors of production in the locality. But this is impracticable in most cases, and diameter-classes alone are sufficient. Where, however, heights have to be recorded, these can be estimated by eye, or with the aid of instruments specially constructed for measuring the heights of trees. Hitherto in India the classification usually adopted has been the grouping together all trees whose diameters do not differ from one another by more than 6 inches. Thus, trees having a diameter of 6 inches, or a girth of 1½ feet and under, form one class; those of from 6 inches to 12 inches in diameter, or from 1½ to 3 feet in girth, another; those of from 12 to 18 inches in diameter, or from 3 feet to 4½ feet in girth, another; and so on.

It would, perhaps, be more logical to make the classes depend on the exploitable size of the principal species. In most mature forest masses, of the sort generally met with, there are three natural classes of stems more or less easily recognisable, *viz.*:—(1) exploitable trees of and above the exploitable dimensions, (2) medium-aged trees ranging

from the exploitable diameter down to, say, two-thirds of that size, and (3) young and suppressed growth having diameters on them two-thirds of the exploitable size. It is possible that the adoption of some such uniform system would be advantageous.

The enumeration of the trees.—The enumeration and measurement of the trees is usually performed by parties consisting each of one recorder and from 4 to 8 coolies and measurers, armed with *calipers*, for measuring the diameters of the trees.

A calipers consists of a graduated rule (A A) at one end, of which is a fixed arm (B B), and on which slides another arm (C C). To enable this arm to slide freely, the hole (a, b, c, d) is made oblique, but in such a manner that as soon as it comes in contact with the log or tree to be measured, it assumes a position at right angles to the rule which it touches at the edges (c) and (b).

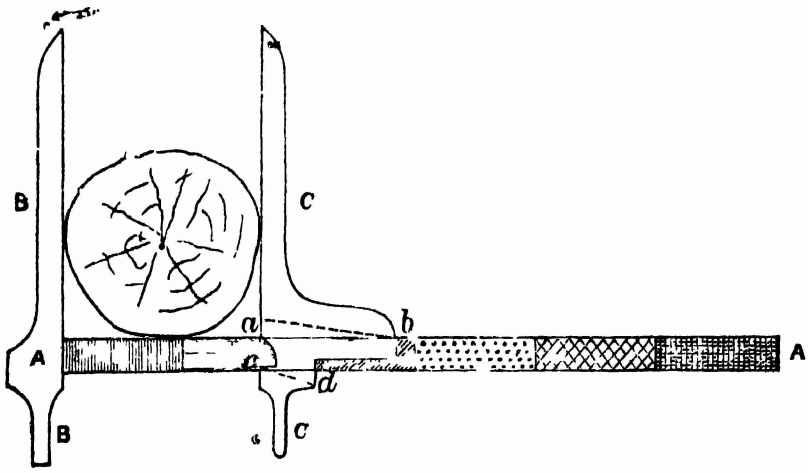

Instead of being graduated in the ordinary way, the rule (A A) in calipers intended to be used by coolies may, with advantage, be painted different colours at distances corresponding to the differences between diameter classes, so that each colour corresponds to a class.

It has also been found a good precaution to use tickets of similar colours to attach to the trees measured.

Thus—supposing there were four classes of trees, the colours might be:—

Class	I,	diameters above 2 feet,	corresponding	colour,	white.
,,	II,	,,	1½ to 2 ,,	,,	,,	green.
,,	III,	,,	1 to 1½ ,,	,,	,,	red.
,,	IV,	,,	½ to 1 ,,	,,	,,	blue.

Where trees of *different* species have to be separately recorded, the tickets may be of different shapes as well as of different colours. Thus, species A might always be marked with square tickets, species B with triangular tickets, species C with round tickets, and so on.

Each enumeration party consists of one recorder and as many gaugemen and coolies as are necessary. The recorder is provided with a pencil and with a blank book ruled in vertical columns to provide for the required number of diameter classes (the larger of which may be subdivided so as to show separately sound and unsound trees), and into as many horizontal divisions as there are kinds of trees to be separately recorded. The vertical columns are headed by the names of the colours on the beam of the gauge which correspond to the diameter classes, and each gaugeman is provided with a bag with separate pockets containing the tickets of different kinds and shapes, and a gauge or calipers. The gaugemen advance in line, and measure each tree at breast-height from the ground. After a tree is measured a gaugeman calls out its specific name, the colour denoting its diameter class, and in the case of the highest classes, whether it is sound or unsound. The recorder then makes the necessary entry in his book, recording each group of ten trees separately, generally by means of two vertical rows of four dots, each crossed diagonally by lines from corner to corner, as shown in the example on page 51.

The soundness or otherwise of a tree cannot always be determined, and many trees which are unsound at the base may remain sound throughout the greater part of the workable stem. Trees are generally classed as unsound if they are noticeably decayed or hollow in the stem, if they have half-dead crowns, or are stag-headed, or if they give back a hollow sound when struck with an axe by a man standing on the ground.

For the purpose of checking the enumeration work, certain plots should be selected for resurvey, and the officer in charge should be present during at least one day's recording in each plot and add the record made by himself to that made before his arrival. By keeping a careful account of the number of tickets issued and of the number returned, the balance that has been expended of each kind is known, and these numbers afford an additional rough check on the number of each kind of tree. But unless the countings are actually verified, tickets may be either accidentally lost or intentionally made away with, so as to lead to the belief that a large amount of work had been accomplished.

It is usually the custom to blaze the trees measured with an axe. This, however, for very obvious reasons, should not be done so as to injure the trees in the manner coolies seem to prefer. Where water is available, the trees may be marked with whitewash *made with rice-water* to render it adherent.

"In crops consisting of fairly regular shaped and not very large trees, the measurement of a single diameter may suffice, especially if successive trees are measured in different directions; otherwise the mean of two diameters more or less at right-angles to one another, should be taken. Although a matter of petty detail, it is necessary to say that the calipers should be applied to the trunks of the trees properly, and the diameter read off *before* they are removed. The diameters should be all measured at breast-height, and on hill-sides this height should be taken on the upper side of the slope. Breast-height has been assumed to be 4½ feet; but as the boles of trees do not taper either regularly or very rapidly, it is not necessary that this height should be exactly measured on the tree before the calipers is applied. Sufficient accuracy is attained if the measurer is careful to hold the calipers at the height of his chest, and the diameter is measured at any height between 4 and 5 feet where the stem is free from excrescences and branches. When a tree divides into two or three main stems near the point at which the calipers should be applied, each stem should be measured separately.

The enumeration survey should be effected over successive narrow strips, each strip being gone over once and in a direction opposite to that in which the immediately preceding strip has been surveyed. On steep slopes it is convenient to run the strips horizontally and to begin at the bottom of the slope. The number of measurers that can keep one recorder fully employed, depends on the density of the forest, on the nature of the ground, and on whether all or only certain classes of the trees composing the crop are to be measured. The number of measurers may then, according to circumstances, range from 2 to 6, or even 7 and 8. As the survey progresses, the trees measured are immediately marked. The mark should be made on the side opposite the area still remaining to be surveyed, so that when the next strip is being surveyed, the men can at once recognise up to what point the strip just completed extends. The duty of the recorder in charge of the party is to see that all the trees are measured, that the calipers are properly applied, the diameters read before the calipers are removed, and the mark made on the correct side. When a division into height classes is necessary, the recorder has also to measure or estimate by eye the height class of each tree as it is gauged.

Recording the results of the enumeration.—The following is a sample of a convenient form of field-book for enumeration surveys in which the classes include a range of diameter and the forest is very irregular. Some of its advantages are:—(i) that it requires very little ruling, (ii) that it may be easily prepared from day to day by the recorder himself, and (iii) that, as the width of its different columns and compartments can, for that reason, be varied to suit the composition of the

crop to be surveyed, a whole day's work, comprising several thousand trees, can be got into a single opening of the book

* Forest	Block			Compartment		
	No. of trees of diameters					
Species.	6 inches to 12 inches	12 inches to 18 inches.	18 inches to 24 inches	24 inches and over.	Total number of trees	Remarks.
Sál . . .	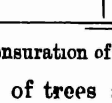	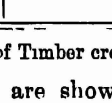	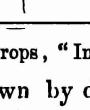	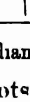	68	
Sain . . .	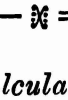				19	
Miscellaneous .		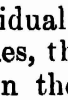			39	

* Mensuration of Timber crops, "Indian Forester, 1889."

The numbers of trees are shown by dots and strokes Each group representing ten trees, consists of two upright rows of four dots each, joined by two diagonal lines which represent respectively the ninth and tenth trees, thus— 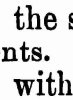 = 10 ; = 9 ; = 8 ; = 7 ; = 6 ; and so on.

Calculating the volume of Material.

Type-trees and form-factors.—The number of trees in each size-class having been ascertained, either by counting and measuring each individual tree in the whole area or by means of sample plots or lines, the volume of material in each class and, consequently, in the whole crop may be calculated, when this is required, by means of *type-trees* as follows :—

We may assume that, on an average, in one and the same crop, trees of the same diameter and height have the same cubical contents. For all practical purposes, therefore, we may assume, without making any great error, that if we select trees that are *representative of each size-class*, ascertain their contents, and multiply this figure by the number of trees in the class each represents, the sum gives the volume of material in the whole crop. Such trees are called *type-trees*, and may be selected either by eye, by taking an *average tree* fairly representative, as regards size of the crop or class, or, more accurately, as follows :—

Calculate, with the aid of tables, the sectional areas at the base, where measured, of all the trees in the size-class

and total the whole. Divide this figure by the total number of trees in the size-class, and the quotient will be the basal area of the type-tree required. Calculate the diameter corresponding to this basal area, fell several trees of this diameter, and find out their contents by actual measurement. The mean of their aggregate contents multiplied by the total number of trees in the size-class will give the total volume of material in that size-class. Proceeding in the same way with each size-class, the sum of the volumes obtained gives the total volume of material in the whole crop.

By *basal area* is meant the area of the section of the stem of a tree measured at breast-height, or, as usually taken, 4½ feet from the ground.

This area is approximately equal to one-fourth the square of the mean of the longest and shortest diameters of the tree at this height multiplied by 3·14156.* For the mean diameter is $(\frac{D+d}{2})$, where D and d are respectively the longest and shortest diameters of the stem of the tree.

By *form-factor* is meant the population which the true contents or volume of a tree bears to a cylinder having the same basal area and height. The volume obtained by multiplying the basal area by the height of a tree is, of course, that of a cylinder; but as trees taper, the true contents of the stem are something less than this. If a = basal area of the trunk at breast-height, h = the height of the bole or length of stem taken, then the volume (C) of an ideal cylinder whose basal area is a and height h, is $a\,h$ and we have the following formula with regard to the constant or reducing fraction called the *form-factor* (f) and the true volume (c^t) of the stem:—

$$c^t = f\,C \qquad C = a\,h;\ c^t = f\,a\,h \because f = \frac{c^t}{ah} = \frac{c^t}{(C)}$$

The value of f is determined by actual experiment, by felling a sufficient number of trees and ascertaining practically the value of $\frac{c^t}{(C)}$, that is to say, the relation which subsists between the ideal cylinder and the true volume of the stem. With the above explanation, we may proceed to prove the rules with regard to the selection of type-trees as follows:—

Let C = the total volume of all the trees in a size-class.
A = the sum of the basal areas of all the stems of these trees.
H = the average height of the trees.
F = the average form-factor of all the trees.
n = the number of trees in the size-class.
c^t = the contents of the type-tree.
a = the basal area of this type-tree.
h = the height of the type-tree.
f = the form-factor of this tree.

We require to find a, the basal area of the *type-tree* representing the size-class.

By supposition C = A H F, and c^t = a h f.

also $c^t = \frac{C}{n}$

* Value of π

It follows that $c^t = \frac{A\ H\ F}{n}$ and, therefore, that $a\ h\ f = \frac{A\ H\ F}{n}$ Therefore, assuming that $h\ f = H\ F$, $a = \frac{A}{n}$ or, expressed in words, that *the sum of the basal areas of all the trees in the class divided by the number of trees in that class equals the basal area of the type-tree.*

As the basal area $= \frac{\pi}{4}\ (\frac{D+d}{2})^2$, it follows that the mean diameter of the tree sought $(\frac{D+d}{2})$ is equal to the square root of the basal area of the type-tree, as calculated above, divided by one-fourth the value of π or mean diameter $= \sqrt{\frac{4a}{\pi}}$. This, in practice, would be found from a table.

The measurement of Trees and Logs.

General Rules.—The following directions in regard to measuring trees are taken (with some considerable omissions) from the treatise on the measurement of timber and timber crops already referred to.

The *heights* of standing trees are ascertained by means of special instruments designed for that purpose and known as *dendrometers* and *hypsometers*. These instruments are of two kinds :—

(i) those which give the height without calculation, their construction being based on the principle of similar triangles; and

(ii) those which give the angles made with a horizontal line by the lines of sight to the top and foot of the tree.

For measuring *lengths*, graduated rules or tapes may be used. Where great accuracy is required, the length of a felled tree or log should be measured parallel to its axis, and not on its sloping surface. The sectional area of a log or tree can very rarely indeed be obtained directly. In nearly every case the girth or diameter must be measured, and the area of the section determined as if the section were a circle. Area of section $= \frac{3{\cdot}14159}{4}$ (diameter)^2.

Girths are measured with tapes. It is convenient to have tapes graduated on both sides, one side for reading the girth and the other for reading the corresponding diameter. The zero end of the tape should be furnished with a sharp metal point that can be easily fixed in the bark of the tree, so that one person may be able to measure any stem, no matter how thick it is. As a circle encloses a greater area than any other plane figure of equal perimeter,

and as the sectional outline of trees is seldom quite circular, the contents of a log or tree calculated directly from its girth will usually be in excess of the true contents. Unless the contour of the log is circular, it is impossible to obtain by girth measurement the circumference of the circle which encloses the same space as the section whose area is required. Irregularities of outline, due to fluting, bark, &c., cannot be overcome in measurements of girth, whereas they can more or less successfully be allowed for in measuring diameters. Experiments made in Baden prove that girth measurement yields a result that is from six to ten per cent greater than that obtained by means of diameter measurement. It is, however, obvious that in cubing logs which depart from the cylindrical form, the measurement of the girth is more to be relied on than the measurement of a single diameter. When the contents of a log are to be deduced from diameter measurement, that diameter should be sought which, considered as the diameter of a circle, gives a result as nearly as practicable equal to the area of the section measured. When the section is elliptical, the mean of the longest and shortest diameters should be taken.

The mean of these diameters D and d is $(\frac{D+d}{2})$, and the area of the section is then assumed to be $\frac{\pi}{4} \times \frac{D^2 + 2Dd + d^2}{4}$. Now as the real area of the ellipse is $\frac{\pi}{4}$ Dd, the mode of measurement recommended gives an excess of $\frac{\pi}{4}$ $(\frac{D-d}{4})^2$, that is to say, an excess equal to the area of a circle whose diameter is equal to half the difference of the two measured diameters. Save in very exceptional cases, this difference is small enough to be negligible. The area of sections of irregular contour can be determined from the mean of three diameters, but the result thus obtained will generally be found to be somewhat too high.

Diameters are measured with a *calipers* such as that already described at page 48. This instrument, it will have been noticed, resembles in all its essential parts a shoemaker's measure. In measuring logs and trees the following general rules should be observed :—

Diameters are to be preferred to girths, unless where, as in Burma, sale measurements are deduced from girths. In such cases, the less accurate girth measurements must be accepted.

In the case of elliptical or oval stems, take the mean of the largest and smallest diameters.

In the case of large stems, measure at least two diameters.

In the case of stems of irregular contour, measure several diameters, and avoid all protuberances, &c.

Measure diameters and girths always in a plane at right angles to the axis of the stem.

If the place of measurement falls on an irregular part of the stem, measure the diameter or girth, as the case may be, at an equal distance on either side (above and below) of the irregularity, and take the mean of the two measurements.

Moss, &c., thick enough to vitiate the measurement of the stem should be removed.

If an accurate measurement of an irregular section is required, transfer its outline to tracing paper and compute its area with a planimeter or acre-comb.

In measuring *felled trees* these should be cut up in the usual way, that is to say, into logs and smaller pieces.

Never be without tables showing at a glance the areas of circles for given diameters and girths.

Several formulæ have been devised for the determination of the contents of *round timber* with more or less near approach to accuracy, but only two are of practical utility. These are—

(1) volume of contents of log = half the sum of the top and bottom sections × length

(2) contents = mid section × length.

Both formulæ contain an error, the extent of which is proportionate to the amount of difference between the diameters at the top and base, respectively, of the log, that is to say, to its degree of taper; and this error increases as the square of that difference. The second formula always gives too small a result, the first too great, the error of defect in the one case being one-half the error of excess in the other. The second formula has also another advantage, for which it is to be preferred: the ordinary modes of measurement and calculation give as a rule too high a figure for the sectional area concerned in each case. This excess is partly compensated for by the employment of the second formula, whereas the other would only exaggerate it. In order still further to diminish error, long logs should be measured in two or more sections, the number of the sections increasing, *i.e.*, their length diminishing with the taper of each log. The contents of those of regular shape and not exceeding 20 feet in length may, however, be

deduced from their sectional area in the middle. Longer logs, even if of regular shape, should be cubed in two or three sections. All large round logs should be measured singly. If the logs are stacked so that they cannot be conveniently measured in the middle, the mean of the sectional areas at the base and at the top must be taken. The mean sectional area should never, under any circumstances, be deduced from the mean of the two diameters at the two extremities respectively, or an error of from 10 to 15 per cent. may result. Poles are seldom cubed singly; nearly always in stacks, built up of poles of one and the same length and of approximately one and the same diameter. Their solid contents are generally ascertained by inspection from special tables. Straight and regular-shaped branches are measured in the same way as logs.

Square-cut timber must, of course, be cubed by the formula, length × width × thickness.

The solid contents of *small pieces*, toppings and loppings and irregular-shaped pieces from stumps and roots, are obtained by the *water-method* (their volume being equal to the quantity of water they displace when submerged), or by the water-method and weighment combined. For the water-method special vessels, called *xylometers*, may be employed. In the combined system samples of each kind or class of wood are successively weighed and measured by the water-method, and the contents of the entire quantity in each class are then worked out by means of a simple proportion sum. Figures expressing specific gravity cannot be employed, since the specific gravity of wood varies not only according to the amount of moisture present, but even in one and the same tree according to the part from which it is derived.

The most rapid way of measuring small wood on a large scale is to stack it cut up into billets of one and the same length, the width of each stack being equal to the common length of the billets. The contents of a stack will be equal to length × height × common length of the billets. The length of a stack built up on a slope must be measured horizontally. The above formula will give us only stacked contents; to reduce these to solid contents, we must determine, by the water-method, or by the combined water and weighment method, the exact volume of a sufficiently large number of stacked units, thereby obtaining the ratio between *solid* contents and *stacked* contents. To obtain the *solid* contents of a stack we have then only to multiply the *stacked* contents

by this ratio, which we may hence term *a reducing factor.*

In connection with the determination of the solid contents of stacked wood it is obvious—

(*a*) That the longer the billets are, or the less carefully built up the stacks are, the less will be the solid contents. In careless stacking billets often lie across one another.

(*b*) That the thicker or more regular-shaped the billets are, or the more carefully built up the stacks are, the greater will be the solid contents.

(*c*) That the larger the stacks are, the larger will be the reducing factor to be adopted.

When *bark* is sold separately, its quantity may be determined either by weighment or by ascertainment of volume. The solid contents are calculated by means of reducing factors in the same way as the solid contents of small wood. Experiments give from 0·3 to 0·4 as the average factors for bark. It has been found that the quantity of bark varies from 6 to 15 per cent. of the total volume of the tree or crop.

There is only one method of arriving at the contents of *standing trees* practicable in this country, namely, by means of *form-factors.* It has already been explained that the cubical contents of a tree is equal to some fraction (which we call f) of the ideal cylinder whose basal area is equal to the section of the tree at breast-height, and whose height is that of the stem. Thus—

$$\text{Cubical contents of tree} = f \times \text{sectional area at base} \times \text{height of stem}$$

$$\text{Therefore } f = \frac{\text{cubical contents of tree.}}{\text{sectional area at base} \times \text{length of stem.}}$$

The average value of f, termed the *form-factor*, is deduced from the measurement of a sufficiently large number of type-trees.

Form-factors may be deduced, according to the require-

The following figures may be accepted as average factors for converting stacked into solid contents—

Split wood	0·65 to 0·80
Round billets (large)	0·50 to 0·65
Ditto (medium)	0·30 to 0·50
Small stuff and stumps and roots . . .	0·15 to 0·30

ments of the case, for the stem only, or for the whole tree, or for the timber only, or for the branches, or for the roots, or for all and each severally.

It has been assumed that the diameter and sectional measurements have been taken at the height of a man's chest above the ground, assumed, for the sake of uniformity, to be 4 feet 6 inches. But it is obvious that any other conventional height would serve the purpose although it is usual and most convenient to employ the one we have adopted. We need refer to only one other convention which is sometimes used. The diameter may be measured at a constant fraction (say, for instance, one-twentieth) of the height of the tree, in which case the form-factors obtained are termed *normal*. Normal form-factors yield perfectly correct results, but they are not practical owing to the difficulty and trouble of measuring at such various heights, many of which cannot be conveniently reached.

Form-factors are said to be *absolute* when the base of the ideal cylinder is assumed to be in the same plane as the diameter which is measured. In this case the contents of the portion of the stem below the plane must be calculated separately.

As may be supposed, calculations made by means of form-factors give closer results for an entire forest than for individual trees.

The preparation of a complete set of form-factors requires great care and experience, as their correctness depends entirely on the selection of the type-trees, whose dimensions serve as the basis of all the calculations. In some cases the trees of a crop have been grouped into various classes according to their height and shape, and a separate form-factor calculated for each class. The most recent investigations prove that form-factors vary chiefly with the height of the trees.

Calculation of the Exploitable Age.[a]

General rules.—In order to calculate the exploitable age of trees, it is necessary to ascertain the girth or diameter at which they furnish the greatest quantity of the most useful material that is required. As a rule the price is the best gauge of the utility so that in most cases it may be said that the trees are

exploitable when, after deducting all expenses of exploitation, the price they realize per unit of volume reaches the highest point.

It not infrequently happens in India that it has to be decided, not what is the price or what is the most useful produce, but whether the people in the vicinity of the forest or the general community should enjoy its produce. The people in the neighbourhood require small wood-fuel and grazing, the general community, large timber. As a rule the decision goes in favour of the local wants, though this could not, as a rule, be defended from an economical point of view. It is, moreover, often overlooked that in growing large timber, small timber from the thinnings and branches is grown too, generally in as great abundance as it can be consumed within the radius to which it can be profitably transported; while more grazing can be provided than if the crop was cut young and the forest, consequently, closed more frequently.

By *price* is here meant, of course, the *net* price of the trees when *standing* in the forest, all cost of felling and extraction being deducted. The net price must be calculated per unit of volume in the rough, unless where there is only a demand for standing trees. When poles, bullies or timber in the rough or *logs* are sold, the price realized per cubic foot for different sized pieces directly indicates the size of the trees that are most useful and will bring in the highest revenue, provided that the cost of extraction is deducted.

It will often be found that, owing to defective means of transport and the consequent greater cost involved in extraction, the *net* price of large logs is lower than that of small logs, although the selling price of the former when delivered in the market may be very much higher.

When the size of the trees has to be calculated from the ruling price for converted timber, planks, sleepers, &c., or manufactured articles, the loss in conversion must be calculated in order to ascertain the cost per cubic foot, and it should be ascertained on what sized trees the loss is *least*. Generally speaking, the loss will be least when the trees are largest.

Suppose that sleepers containing 2 cubic feet and costing one rupee each to convert and deliver, sell for R3 each. In order to ascertain the price realized per cubic foot in the rough, it will be necessary to know the average number of sleepers yielded and the cubic contents of an average exploitable tree. Suppose the average diameter of the trees felled was 1½ feet, and that it was found that each tree felled contained 80 cubic feet and yielded 20 sleepers, the price realized per tree would be 20 × 2 = R40, and the price per cubic foot standing would be $R\frac{40}{80}$ = 8 annas. The loss on conversion of these trees is 80-40 or 50 per cent. It should be ascertained whether this would not be less and the

price realized consequently higher if larger trees were felled. Thus, suppose it was found that 2′ feet trees containing 120 cubic feet yielded 40 sleepers, the net price realized per standing tree would be $40 \times 2 =$ R80, or per cubic foot R$\frac{80}{120} = 9$ annas. The loss on conversion is $120 - 80 = 40$ cubic feet, or 33 per cent. as compared with 50 per cent. when 1½ foot trees were felled.

A higher revenue is not realized by felling large trees unless the net price of the latter per cubic foot is higher. The price per tree standing would of course be higher even if the price per cubic foot did not rise. But this must not be mistaken for a higher revenue, for we can grow more small trees on the same area than large ones. The larger trees might bring in double as much per tree as the smaller ones, but there might be double as many of the smaller trees. The quantity of material produced per annum would be the same.

In fixing the dimensions of the exploitable tree, we fix the number of trees to be felled, and it might be thought that because the younger the age of felling the more trees can be felled, the lower age would be best. Thus, suppose forest of 1,600 acres in which the exploitable size was fixed at 18 inches in diameter corresponding to 100 years old, and yielding, say, 1,184 trees a year, and that it is proposed to raise the size to 2 feet diameter. We will suppose that it is found that the average production of the soil is 63 cubic feet a year, and the tree of 2 feet contains 135 cubic feet as compared with 85 cubic feet in the 1½ feet tree. The number of trees that could be felled would be $\frac{63}{35} \times 1{,}600 = 752$ trees annually. It might be argued that it would be better to get 1,184 trees a year than only 752. This depends on the purpose for which the trees are required and the price they realize. Thus, if the net price realized per cubic foot for trees of the larger size, owing to the better wood or less loss in conversion, came to 4 annas per cubic foot, as compared with only 3 annas for the smaller trees, each of the larger trees would be worth R34, and compared with R16 for the smaller and the annual revenues would be if trees of 2 feet were felled, R25,568; if trees of 1 foot were felled, R18,944.

Indian forestry is not ripe for elaborate calculations and must be satisfied with felling when the revenue will be highest or the produce the most useful: otherwise it would also be necessary to consider the larger capital required to produce the larger sized timber.

The correct calculation of the exploitable size is of the greatest importance, and demands a good deal of careful local enquiry and comparison of rates, &c. In European countries where accurate forestry has long been practised, and the wood trade is fully developed and established, the most profitable exploitable size is well known for each class of produce and treatment, but this is not the case in India.

The following is an example of the sort of calculation that would be made to ascertain the most profitable size for felling for fuel:—

Description of material.	Selling price per 100 cubic feet stacked.	Cost of cutting and extracting per 100 cubic feet stacked.	Net price per 100 cubic feet stacked.	Reducing factor per 100 cubic feet stacked	Net price per 100 cubic feet solid.	REMARKS.
	R	R	R	R	R	
Fuel in billets of over 10″ .	5·89	1·6	4 29	0·63	6 81	
Fuel in billets of 10″ to 6″ .	5 32	1 0	4 32	0·57	7·58	
Fuel in billets below 6″ .	3·50	1·51	1 99	0 37	5·48	

It is evident from this that, assuming that the average annual increment remains fairly constant, there is every financial advantage in growing trees that will furnish billets of from 10″ to 6″ in diameter.

The size being decided, it only remains to determine the age at which the trees attain this size. This is often exceedingly difficult in India owing to the ring marking being indistinct, and also to the fact that several species form more than one concentric ring of wood each year. In such cases the rate of growth can only be determined when trees of known age are to be found. The following remarks only apply, therefore, to those species which form only one distinct concentric ring of wood each year.

In the case of *felled trees*, the required age is found by counting the number of concentric rings on the section of the stool or base of the trunk. The countings should be made along several radii, and the mean taken. Where necessary, the rings in the sap wood and bark should be separately counted and recorded, and all great *extremes* should be rejected. Usually, in order to determine the number of years required by trees of one size-class to pass into another, which it is often necessary to know in order to calculate the possibility in selection-worked forests, the average number of rings that go to the diameter of each *size-class* is separately recorded.

The age may be very roughly determined in the case of a good many species *without felling* the trees by the use of the little instrument known as "*Pressler's borer*," a hollow screw gimlet which, on being screwed into the trunk and again

withdrawn, brings out a small cylinder of wood on which the ring-markings can be counted. By making two or three such borings on different sides of the trunk, and measuring the lengths of the cylinders extracted, the average number of rings per unit of radius can be counted.

* "This instrument is a gimlet, consisting of a tube (G) with a very sharp-cutting edge (E).

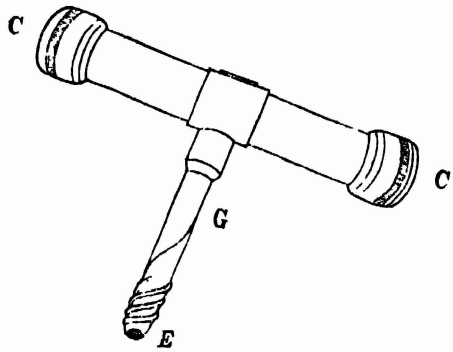

To render the instrument easily portable, the gimlet portion G can be taken off and put into the cylinder CC, which is hollow, and the caps of which unscrew off.

As the tube is forced into the trunk of a tree, a cylinder of wood is cut out by the tube. On withdrawing the gimlet, the cylinder of wood can be easily pushed out of the tube and the ring-markings on it counted. When the borer does not quite reach the centre of the tree, the age of the remaining portion of the trunk can be estimated with sufficient accuracy.

If the conditions of the forest have not materially altered since the appearance of the trees experimented upon, the ring-countings will give also the age of individuals of any diameter-class smaller than the class to which those trees belong."

* Treatise on the "Mensuration of timber crops" published in the "Indian Forester" for 1889.

CHAPTER III.

THE WORKING-PLAN.

Preliminary explanations.

General arrangement followed.—The prescription of the possibility constitutes, practically speaking, the *working-plan* for all forests of which the exploitable material is wood or other tree products, and as the manner in which the possibility is calculated depends on the method of treatment, it will be convenient to discuss separately the form of working plan that is required for each method.

This will be done in the following order, the coppice methods, as the simplest, being considered first. The manner of prescribing the provisional treatment that crops may require,—transformation and restoration fellings, preparatory thinnings and other improvement fellings,—in order to apply these methods, will also be dealt with in describing the nature of the working-plan for each method :—

Method of simple coppice.
" " coppice-selection.
" " branch-coppice.
" " coppice with standards.
" " clearances.
" " storied forest.
" " selection.
" " successive fellings.
" " pastoral treatment.

Before dealing with these methods in detail some preliminary explanations are, however, necessary.

Manner in which the possibility is prescribed.—It has already been explained that the possibility is prescribed in one of three ways, *viz.*, *by area*, *by number of trees*, or *by volume of material*, and that either of the two latter may be combined with the former. Practically speaking, this is what is always done, and the possibility is expressed by prescribing the felling, under certain sylvicultural rules, of the crop, or of a limited number of trees or volume of material *in a given area.*

General and special Plans.—The prescription of the possibility involves the formulation of a *general plan* or framework

on which the whole working of the forest is built up, and a *special plan* or statement of the fellings to be made for a short time only.

Thus, suppose the working-plan for a forest, we will suppose, 1,000 acres of sâl forest, to be :—treatment by the selection-method with the object of producing sâl trees of 2 feet in diameter requiring 100 years to grow, and that the possibility has been found to be 1,000 mature trees a year. These prescriptions constitute the *general plan*. The regulation of the fellings for a short time, say 10 years, that period having been adopted as the felling rotation, and their allocation to definite areas or blocks on the ground of more or less one-tenth of the area would form the *special plan* or *statement of fellings* for the first felling rotation. A better example is, however, afforded in the method of successive regeneration fellings in which the periodic blocks and the order in which they are to be regenerated are prescribed in the *general plan*, while the *special plan* prescribes in detail the fellings to be made in each block during the first period only.

Provisional working scheme.—The possibility is based on the condition of the existing crop, and as this crop is practically always abnormal, being either insufficient or superabundant or *irregularly arranged*, the possibility also exhibits corresponding divergencies from the normal standard.

Thus a coppice of 500 acres is to be exploited at 20 years. The normal annual fellings would be 25 acres of coppice 20 years old. But if there were no crops of, say, 10 to 15 years old, it would not be possible to follow the normal plan: either area occupied by the crops of 16 to 20 years should furnish the fellings for the first 10 years and then a larger area be felled, or crops of less than 20 years should be felled for some years.

It has been considered by some necessary to distinguish between the actual scheme applied and the ideal one, and the former has, in consequence, received the special name of *provisional plan*. This is, however, hardly necessary, because the only plan with which we have to deal is the provisional one, and there can, therefore, be no confusion.

Preparatory period.—The length of time which is necessary in order to restore the crop to the normal condition is sometimes called a *preparatory period* (or with singular infelicity *preparatory or provisional rotation*). It is necessary to adopt a preparatory period where the age-classes

---

It has in some cases been imagined that this general scheme may be dispensed with and the fellings prescribed without this, in what has been called a "preliminary working-plan". This is, however, a mistaken notion. A forest exploitation must have a definite purpose and this cannot be arrived at without considering what crop and capital is to be created, and this necessitates the determination of the exploitable age and the drafting of a general scheme of working for that age.

are defective or irregularly arranged; where it is necessary to hasten the felling of over-mature material, or where the immediate regeneration cannot be undertaken. Theoretically the length of this preparatory period should be the same as the exploitable age, but in practice a shorter period is generally adopted and the reconstitution of the crop hastened by judicious improvement fellings, &c. The object is to obtain a normally constituted crop containing regularly graduated series of age-classes, and the creation of such a capital can generally be sufficiently approached in a shorter time than the exploitable age.

Thus the irregularly constituted coppice of 500 acres already taken as an example, which it is wished to exploit at 20 years, could only be reconstituted, according to the normal type, by making 20 successive fellings, of 25 acres in extent each year, during the next 20 years, by the end of which time there would be on the ground twenty age-classes, each occupying the same area and differing in age by one year. In practice, however, the ideal accuracy is not necessary, and it is sought to reconstitute the capital as soon as possible. In the case of coppice exploited at a low age, the provisional period is, however, generally taken equal to the exploitable age.

Prescribing the fellings.—The general working scheme is merely an outline, detailed operations could not, in most cases, be prescribed with any degree of certainty for so long a time in advance as the exploitable age or length of the preparatory period, and it is necessary to regulate these separately for a short time only in a special statement prescribing the—

Duration of operations;
Area to be operated on in each year or period;
Order to be followed in making the fellings;
Nature of the fellings to be made;
Material to be removed.

Period for which fellings are prescribed.—The length of time for which the fellings should be prescribed depends on the general working scheme, as provisionally modified, and on the nature of the plan. The time should not be too long, as the longer it is the more likely unforeseen events may require it to be modified, and this may prove inconvenient. As a general rule, the term should be long enough to enable the prescribed fellings to pass *once over the whole area to be worked*, or to complete any definite operation undertaken, that is to say, the fellings would generally be prescribed for one whole felling rotation in the case of coppice and selection

worked forests, for one period in the method of successive fellings, &c. In European countries longer periods than 10 or 15 years are seldom taken, but in India, in the case of selection fellings, much longer periods of 25 years or more have sometimes been found to be expedient. From 10 to 30 years would, therefore, generally be the limits for which the prescriptions would run.

Area operated on.—Briefly stated, the area to be operated on each year may be determined by dividing the figure representing the number of acres in the whole area of the forest, less blanks, &c., by the number of years in the felling rotation, and then apportioning a certain number of the coupes so found to each block or natural subdivision, according to the fertility of the soil.

The following example of this process will explain how this is done, *in practice*, better than any verbal description. [It need hardly be explained that *small* areas of unexploitable forest would be included, where necessary, in a circle.] Suppose a forest of 3,870 acres containing a crop consisting of three types, only one of which is at present productive, owing to the others containing no saleable species; also that four blocks bounded by roads, rivers, or other landmarks, have been formed and analysed as follows:—

Name of Block.	Exploitable Sâl forest.	Unproductive mixed forest without Sâl	Blank.	Total	REMARKS.
	Acres.	Acres.	Acres.	Acres.	
Paimar . .	690	180	80	950	Very good soil in plains.
Datwind . .	540	100	30	670	Do. do.
Haigla . .	530	250	60	840	Do. do.
Baira . .	1,240	150	20	1,410	Poor and rocky soil on hills.
TOTAL .	3,000	680	190	3,870	

We will assume that the felling rotation adopted is 15 years and that it is, consequently, required to divide this area into 15 portions of *equal forest resources*. This would be done as follows:—

Total area of forest	3,870	acres.
Deduct blanks and unexploitable areas . . .	870	"
Total exploitable area . .	3,000	acres.

Average size of area to be operated on annually $\frac{3,000}{15} = 200$ acres. In order to lay out these areas each block would be divided into an integral number of coupes containing a greater or smaller area of exploitable forest than the average according as the fertility of the soil was good or bad. Thus Paimar, Datwind and Haigla containing very good fertile soil in the plains might each be divided into coupes containing on an average less than 200 acres of sâl forest, whilst Baira, situated in the rocky ground in the hills, containing a bad soil, might be divided into five portions, each containing about 250 acres of sâl forest, or a good deal more than the average. When marked out on the ground the coupes would, we will suppose, be as follows :—

Serial No. of coupe	Block	Area in acres.			
		Sâl.	Unproductive.	Blank.	Total.
1	Paimar . .	180	60	Nil	240
2	Do . . .	175	20	Nil	195
3	Do .	175	Nil	20	195
4	Do . . .	160	100	60	320
5	Datwind . .	185	70	30	285
6	Do . . .	175	30	Nil	205
7	Do . . .	180	Nil	Nil	180
8	Haigla . .	175	50	60	285
9	Do . . .	175	100	Nil	275
10	Do. . . .	180	100	Nil	280
11	Baira . . .	240	Nil	Nil	240
12	Do. . . .	230	10	20	260
&c.	&c.	&c.	&c.	&c.	&c.
	Total .	3,000	680	190	3,870

In selection working, where the number of trees to be felled is prescribed, the usual practice in India has been to study the results of the enumeration survey and so select areas capable of furnishing the number of trees required each year. Thus if the possibility were fixed at 2,000 trees, areas capable of furnishing 2,000 trees would be selected to constitute the annual coupes. This system is, however, open to objection, in that the coupes are not permanent as they ought to be. They depend merely on the crop of the day. At the next felling rotation totally different annual coupes will have to be formed. It would, therefore, be better to form good, permanent, annual coupes and then prescribe the fellings to be made in them without attempting to obtain exactly the same yield each year.

Balancing the production.—In coppice fellings and other cases in which the possibility is prescribed by area only, it is sometimes sought to *balance the production* and determine the area of the coupes by processes more exact and scientific in theory than those described above. The production depends, we know, on what has been called the *quality of the locality*,

that is to say, on the influence of the climate, aspect, soil, &c., and on the composition and density of the crop, and it has been attempted, by giving values expressed in figures to each of these factors, to arrive at the result sought by means of mathematical formulæ. But such calculations have no real basis of truth and only serve to give an appearance of mathematical accuracy to estimates which can be more correctly made by the exercise of a little judgment and common sense. In the present state of our knowledge of forestry in India they are entirely out of place.

Locating the fellings—Certain rules have been formulated for locating the fellings which are to be found in all works relating to sylviculture. These rules, although theoretically they occupy an important place in organizing forest working, are not, however, always applicable, especially in the case of irregular forests worked by the selection method. They may be stated as follows :—

(1) The fellings should be adjacent and succeed one another in the order in which made, and have the most regular form possible;

(2) They should be so located that the produce of an area in course of exploitation will not hvae to be carried through the young crops in the portions of the forest recently felled;

(3) They should be arranged so that the latest felling made may always be on the side from which dangerous winds proceed ;

(4) On steep slopes the fellings should be commenced at the bottom of the slope;

(5) In hill forests the coupes should be long and narrow in form, and have their longest sides perpendicular to the direction of the dangerous winds.

Nature of the fellings.—The nature of the fellings to be made depends on the method of treatment, permanent or temporary, and may be explained by a single term. A list of the various fellings made has already been given in connection with the methods of treatment. But in the irregular condition of the forests in this country and the want of well-known methods of cultural treatment applicable to them, it is always well to indicate briefly the more important points connected with the application of the fellings. This may be done in several

ways by a few remarks given in the statement of fellings itself or in a separate note, or the detailed descriptions of the forest may be referred to, and such suggestions as are likely to prove useful to the executive officers may be added in the remarks column of the descriptive statement of each compartment or block.

The possibility.—The possibility, as calculated by one or other of the methods to be explained hereafter, should be prescribed for the length of time for which the detailed statement of fellings is drawn up and possibly subject to revision during that period.

The method of Simple Coppice.

General Plan.—The general plan in the case of the coppice method is exceedingly simple, and consists in dividing the forest into as many annual coupes as there are years in the exploitable age, and prescribing the felling of one such coupe in rotation each year or period. Where the age-classes are not suitably distributed or graduated a *provisional plan* is necessary, but as the age of exploitation is short, the length of the *preparatory period* during which the provisional plan remains in force is always made the same as the exploitable age.

Exploitable age.—The age of felling is the first point to determine. This age varies between tolerably narrow limits; the trees cannot be felled at a very advanced age, or else they will have lost the power of throwing out shoots, nor while quite young, or else the produce may be unsaleable. As a rule, both these limits should be determined as well as the size of the trees which furnish the most useful material. The age of felling can then be decided on with safety.

Period for which the fellings are prescribed.—The fellings should always be prescribed for the whole length of the rotation, which is the same as the exploitable age area.

Area to be operated on.—The area of the coupes is determined by dividing the total exploitable *wooded* area by the number of years in the exploitable age. This gives the average size of the coupes which may be increased or diminished as required. Each block or natural subdivision should be divided into an integral number of coupes, as far as possible of the same productive power.

Order to be followed in the fellings.—The rules regarding the allocation of the fellings should be very carefully attended to.

The *coupes* should have the most regular form possible; as a rule, they should succeed one another in regular order on the ground, and the produce of a coupe in course of exploitation should not have to be transported through another recently exploited. A good system of roads and paths has consequently to be provided.

Nature of the fellings.—The sylviculture rules regarding the fellings to be made are simple. The felling of the trees flush with the ground, and at the most suitable season of the year, is all that, as a rule, has to be prescribed.

Possibility.—This is prescribed by area, and is determined in prescribing the area to be operated on. In determining it, the age, when known, of the crop, and its age when it is felled, should be given. These two last items are required in justification of the prescriptions which, owing to the irregularity of the crop, may often depart from the normal.

The exploitation of the coupes in regular succession, in the order in which they stand on the ground, though desirable, is not always practicable in the first rotation, especially when dealing with areas which have already been subjected to coppice fellings without the control of a regular working-plan, but this offers no real difficulty to the framing of the plan of the fellings of which the following is an example.

We will suppose that a plan is being drawn up for a working circle, containing 1,188 acres already worked as coppice composed as follows: —

Block.	Area in acres				Remarks.
	Wooded	Blank.	Occupied or uncultivable.	Total	
Chansil .	360	3	1	364	Of which { 178 aged 12 to 13 years. 182 „ 8 to 9 „
Kotigall	200	9	...	209	„ 8 years.
Datmir .	100	1	...	101	„ 5 to 6 years.
Naintwar .	270	2	3	275	„ 4 to 5 „
Sahlra . .	236	3	..	239	„ { 130 aged 1 year. 106 „ 13 years.
Total .	1,166	18	4	1,188	

This analysis enables us to study the composition of the growing stock or capital. We have—

Crops 1 to 3 years old	130
„ 4 to 6 „ „	370
„ 7 to 9 „ „	312
„ 10 to 12 „ „ and over	284

Whereas the whole wooded area being 1,166 acres, which has to be worked over in 12 years, or on an average of 291 acres every 3 years,

there ought to be above 290 acres of each of above ages. This shows that the capital is over-rich in woods of medium age, and that an extra felling can be made to utilize the excess capital. We will assume it has been decided to work this forest on a short rotation of 12 years in order to furnish small firewood for the use of the right-holders and villagers in the neighbourhood. The average size of each annual coupe would be found, by deducting the blanks, &c., to be $\frac{1166}{12}$ or 97 acres, but we will suppose that, in order to provide for differences of fertility in the different blocks which, owing to a complete change of soil, are somewhat marked, it has been decided to form the following coupes :—

Chansil	— good soil	— 4 coupes of 90 acres wooded each.	
Kotigall	— medium	— 2 „ of 100 „ „ „	
Datmir	— do.	— 1 „ of 100 „ „ „	
Naintwar	— good soil	— 3 coupes of 90 „ „ „	
Sahlra	— very bad soil	— 2 „ of 118 „ „ „	

It will also be supposed that advantage is taken of existing roads and other land-marks in fixing the coupes so that these are not exactly equal, so that the fellings to be made are as follows :—

Year of fellings or order of working 1st rotation.	No. of coupe on ground.	Block or compartment.	Area in acres.				Age of the crop when felled. — Years.	Remarks.
			Wooded.	Blank.	Occupied or unculturable	Total.		
1889-90	XII	Sahlra	106	..	...	106	14	As the area occupied by mature crops is in excess, coupe No. 12 in Sahlra will be felled in the first year, and again felled in its turn in the last year of the rotation. This slight departure from the regular order will disappear in the next rotation.
	I	Chansil	92	2	1	95	14 to 15	
1890-91	II	Ditto	86	1	..	87	15 to 16	
1891-92	III	Ditto	94	...	.....	94	12 to 13	
1892-93	IV	Ditto	88	...	.. ..	88	13 to 14	
1893-94	V	Kotigall	108	6	...	114	14	
1894-95	VI	Ditto	92	3	.....	95	15	
1895-96	VII	Datmir	100	1	.. ...	101	13 to 14	
1896-97	VIII	Naintwar	82	1	.....	83	13 to 14	
1897-98	IX	Ditto	96	...	3	99	14 to 15	
1898-99	X	Ditto	92	1	...	93	15 to 16	
1899-1900	XI	Sahlra	130	3	.....	133	13	
1900-1901	XII	Ditto	106	...	.....	106	11	

It is evident that if an equal yield were required, the excess felling rendered necessary by the superabundance of mature crops would have to be spread over several years instead of being carried out in one year.

Conversion of irregular forest into coppice.—In the foregoing example it is assumed that the forest has already been

under coppice treatment, and that consequently there is a more or less complete scale of age-classes on the ground. Generally speaking, however, this is not the case in India, and the crop to be dealt with not infrequently consists of an irregular and inferior or ruined seedling forest or scrub.

In any case the forest may offer one of two conditions, *viz.*, either the number of young stems, having the power to throw out coppice, in the growing stock is sufficient to furnish a coppice crop, or it is not. In the former case, the conversion of the crop into coppice offers no difficulty. It will first be necessary to decide on the age at which the coppice, when created, should be exploited. This, unless there are coppice forests of the same kind in the neighbourhood in which experiments can be made, must be more or less a matter of guess work. Having decided on the age, the area to be worked would be divided, in the manner already explained, into as many coupes as there were years in this rotation, and one of these coupes would be clean felled each year.

Where it was necessary to deal with a mature or overmature crop, in which the age of the majority of stems had lost the power of throwing out coppice shoots, it would be necessary to regenerate the crop by seed with a view to constituting a new crop which could be converted into coppice while still young. For this purpose the forest should, just as in the former case, be divided into as many coupes as there are years in age at which it is proposed to exploit the coppice and the regeneration, either by natural or by artificial means, of one or two of these coupes taken in hand each year. By this means, by the end of the felling rotation, there would exist a complete scale of age-classes on the ground, and these could then be converted into coppice regularly and easily as in the first example. In both cases the fellings to be made would be prescribed in a table of fellings such as shown in the first example taken.

Suplementary regulations; preserving belts of trees.—It is always useful to preserve belts of trees, sometimes, for climatic reasons, of considerable breadth, along the roads or main division lines and the boundaries of the simple coppice compartments. Such trees are useful in many ways; they protect the coupes, furnish seed, and, when required, act as boundary marks, and they adorn the forest. The establishment of such belts, the species to be preserved, &c., should therefore be prescribed in the Working-Plan.

Works of improvement.—The works of improvement required in coppice forests are mostly limited to the re-stocking of blanks, which are generally common enough in such forests, and in some cases to the construction of ditches or fences for the exclusion of cattle. Coppice forests are not likely to be formed except for the supply of fuel in the immediate neighbourhood of villages and of large towns, in situations exceedingly liable to trespass. In such situations a ditch or wire fence is often the cheapest way of putting a stop to cattle trespass which, in view of the short intervals at which the stock in coppice forests is renewed, is a grave danger.

Coppice-selection Method.

General Plan.—The coppice-selection method of treatment, which is simply a selection method in which reproduction is obtained by coppice instead of by seed, is only applied in this country, it is believed, in the treatment of bamboos, of which the "culms" may be compared to coppice-shoots. Such fellings may be carried on simultaneously with those made under whatever other methods of treatment are being applied to the forest in which the bamboos are growing; the whole bamboo-producing area, or so much of it as it is desirable to exploit, being divided into two or three coupes, which are visited in turn every two or three years, as the case may be, and care being taken always to leave a certain number of shoots in each clump.

Such fellings are organized and prescribed by area in the way that would be followed in the case of simple-coppice worked on a very short felling rotation. The possibility regulates itself, and all that is required is to parcel the area worked into two or three coupes to be worked in regular rotation.

The branch-coppice Method.

General Plan.—In certain parts of India, notably in the hills, the inhabitants have a practice of pruning or lopping off branches of trees for firewood and manure, or for fodder or litter for their cattle. In the places where this practice prevails, the exportation of wood is frequently out of the question, and there is consequently often more than the people can utilize, while fodder during the winter is urgently needed. In such cases the method cannot be condemned, as it may be the sole means of furnishing the fodder that is

required, and it may, therefore, sometimes be necessary to recognize it as a useful modification of the coppice method. Conifers are often treated in this way in the Himalayas. These do not of course throw out shoots, but the smaller branches left and new branches springing from buds on these branches replace those removed. When necessary, the working of forests according to this method may be organized in the same way as ordinary coppice on a short rotation of from 4 to 6 years.

Modification of the branch-coppice method.—In some countries a modification of this method is practised in pasture grounds. This consists in pollarding all the trees at a height of 5 or 6 feet from the ground, so that the young shoots produced may be out of reach of the cattle. These shoots are removed a few at a time, as in the coppice-selection method, and the Working-Plan consists in dividing the area into a few coupes to be worked over in rotation, and limiting the size of the branches to be cut. The larger branches bear seed from which a sufficient number of young trees are produced to replace the old "pollards" which decay.

Method of Coppice with Standards.

The general Plan.—*The method of coppice with standards* is applied in exactly the same way as simple coppice, the difference (it is a very great one) being in the selection and reservation of the standards. The *exploitable age* is calculated for the underwood only, and in the same way as in the case of simple coppice; generally, however, the underwood is felled at a more advanced age, as this lengthens the stems of the reserves and has other advantages. The *possibility* is prescribed by area, as in simple coppice, but with the addition of a rule regulating the constitution of the reserve of standards, that is to say, prescribing the number of stems of one rotation to be reserved at each exploitation and the number of older stems to be felled.

Reservation of standards.—The key-note of the method lies in the reservation of the standards, and the value and exact constitution of this reserve must be determined with great care. The number and proportion of each class of standards have therefore to be decided on. The number of all classes of standards that can be allowed to occupy the ground is limited by the fact that these standards should remain

isolated throughout their growth. The *maximum* number per acre is, therefore, the area of one acre divided by the average area covered by the crown of one *mature* standard, but the number that can actually be reserved depends on the species both in the reserve and in the coppice. As regeneration is obtained by means of coppice shoots, the shade must not be allowed to interfere with the full development of the latter. Provided this does not happen, the greater the number of standards reserved the better, as this enormously increases the value of the capital and the revenue. The value of the coppice as compared with the reserve, when this is fully established, is insignificant.

The following example exhibits the manner in which the number of standards can be arrived at and the influence of the reservation on the revenue and capital value of the forest. It will be assumed that the length of the felling rotation is 20 years, that the maximum age at which the standards can be preserved is 80 years, and that it has been found by experiment that the *cover* of the trees of different ages is as follows :—

	Square feet.
Trees of one rotation or 20 years	30
„ two „ „ 40 „	150
„ three „ „ 60 „	400
„ four „ „ 80 „	600

The number of square feet in one acre is 43,560 feet, and as $\frac{43,560}{600} = 72$ a crop of that number of trees of 80 years old would form a *complete crop* on one acre. Let us suppose that in view of this and from observation on the ground it is decided that the total number of standards per acre should never exceed about 40 trees, and that trees of from 60 to 80 years old have attained the most useful dimensions they can reach while sound ; also that it has been estimated that only about a third of the stems isolated at the first rotation can live to grow to the next larger size, and so as regards these again, so that there should be reserved at each exploitation —

27	standards of	one	rotation.	
9	„	„	two	„
3	„	„	three	„

As soon as the capital was constituted the number of standards to be felled at each exploitation would therefore be :—

Trees of	one	rotation,	felled	0,	reserved	27
„ „	two	„	„	18,	„	9
„ „	three	„	„	6,	„	3
„ „	four	„	„	3,	„	0

Just before each exploitation there would be standing on the ground per

acre, when the capital was constituted, in addition to the 27 standard *in embryo* covering an area of 810 square feet,

		Square feet.
27 trees of two rotation covering	. . . .	4,050
9 „ „ three „ „	. . . .	3,600
3 „ „ four „ „	. . . .	1,800
TOTAL AREA COVERED	.	9,450

The maximum area covered by the reserve, including that covered by the trees about to be reserved, would, therefore, only amount to one-fourth of the total area. This would leave plenty of room for the coppice to grow.

As regards the effect of the reservation on the capital value of the forest and on the revenue, we may assume, as an illustration, that the net value of the tree of 40 years old to be R5, of 60 years old R10, and of 80 years old R20, and that at present the coppice 20 years old produces at each felling a net profit of R100 per acre. The effect of the reservation of the standards would be therefore to raise the net value of each one-acre coupe when the crop is mature from R100 to R310, and the net *annual revenue* per acre from R5 to R15½. At 4 per cent the money value of the crop of coppice per acre amounts to R125 without the standards. With the standards its value is R387·5. This is probably below what would actually take place in most cases.

There would be felled at each coupe—

			R	R
18 trees,	40	years old, @	5	=90
6 „	60	„ „ „	10	=60
3 „	80	„ „ „	20	=60
		TOTAL .		210

In selecting the standards attention is paid to their origin, their species, their shape, their condition, and the position in which growing. Seedlings should be preferred to coppice because they are longer lived. Where, however, seedlings are not found sound shoots from *young* and *small* stools may be chosen. Only such species as furnish valuable timber should be reserved; inferior trees should not be selected. It is not necessary to reserve the prescribed number of standards in *every* acre or coupe; only well shapen, straight, sound stems of good species should be chosen, and these should be selected in places where it will be possible for them to develop and thrive. This should all be prescribed in a regulation attached to the *statement of fellings*.

Supplementary regulations.—The importance of a numerous and well-constituted reserve, formed chiefly of seedlings, has been explained, but there is considerable danger of these seedlings not being forthcoming, owing to their being suppressed by the faster growing coppice, unless means are taken to foster them by means of cleanings and thinnings carried out during the interval between the successive exploitations. These cleanings are made at frequent intervals, every year or

every two or three years, according to the species and rate of growth, until the coppice has attained a certain age, 5, 10 or 15 years, when they are continued at longer intervals as *thinnings*. Both the cleanings and thinnings are prescribed by area.

Conversion of irregular high forest to coppice with standards.—This conversion, except as regards reserving standards, can be done in exactly the same manner as has been explained with regard to simple coppice. If there is a sufficiency of young trees capable of producing coppice shoots, the conversion can be commenced at once, the forest being divided into coupes to be felled in rotation just as if they already contained coppice growth. If such is not the case, it will be necessary first to obtain a young growth, which can then be operated on as in the first case. The young growth can either be obtained naturally by regeneration fellings or artificially by sowing or planting up the area it is wished to treat as coppice. As regards the reservation of the standards, this obviously presents no difficulty, the stems it is wished to reserve have only to be selected, and the reserve constituted straight off. Even where the crop is so mature that it is necessary, before applying the coppice method, to obtain a new growth, the trees should be reserved with a view to constituting the reserve with mature stock when the coppice fellings are consumed. The *possibility* for this coppice conversion, when this is undertaken direct, may be calculated in the same way as already shown for ordinary coppice fellings.

Transformation of simple coppice into coppice with standards.—The value of coppice with standards is so much greater than that of simple coppice, that it may, in some cases, be desired to convert a simple coppice into one with standards. The operation is very simple, as it merely consists in the reservation of the required number of standards in each coupe. This would not necessitate any change in the working-plan in force beyond prescribing this reservation. The fellings would otherwise be organized in the same way as already explained.

The Methods of Clearances.

General Plan.—This method, it has already been explained, includes several different forms, *viz.*, *clearings on adjacent areas, clearings on alternate parallel strips, and clean*

fellings with artificial regeneration. In all these modifications the possibility is determined in the same way, by area, as in the method of simple coppice, and the number of coupes, if annual, is in each case made equal to the number of years in the exploitable age; if biennial, to half the number of years, &c. The fellings are, however, prescribed with some slight differences in each of the modifications.

In the first method, the exploitable age having been determined, the whole area is divided into as many coupes of equal fertility, or equal resources, as there are years in the exploitable age, or, if necessary, into half or one-third as many *biennial* or *triennial* coupes, one of which would be felled every year or every two or three years, as the case may be. The clearances made may be either clear fellings, or a certain number of trees may be reserved to grow to a larger size, and to assist in the regeneration by the seed they shed. Where no trees are reserved, natural regeneration could only be secured by means of seed shed from adjacent trees, and the size of the clearances should be small.

Clean-fellings (with artificial regeneration) is organized in the same way as the method of clearings, except that instead of trusting to reproduction from chance seeds falling from the reserved trees or the adjacent forest, the area felled is planted up or sown each year. The size of the coupes may obviously be as large as can be re-stocked artificially, and unless this re-stocking fails, the ideal or normal type of forest may be approached very closely under this method. The cost and difficulty of artificially re-stocking large areas successfully are the chief drawbacks to its employment.

The object of the *strip method*, which is the same in principle as that of adjacent areas, is to ensure natural regeneration taking place over large areas. With this object long narrow strips are cleared, and every alternate strip is exploited until the whole area has been traversed, when the strips left would be felled. By these means a newly-felled coupe has a hedge of seed bearing and sheltering trees on either side of it. Larger areas may obviously be felled without risking failure of reproduction than in the case of adjacent areas, and reserves may be left, as in that method, if desirable.

Storied Forest.

General Plan.—In applying this method the number of

stems of each age or size-class to be reserved must be decided on. This is deduced from the average area covered by the crown of each and the rate of growth. The difference in age between each class is, we assume, equal to the length of the felling rotation, and the classes must be formed so that the trees of one class will attain the dimensions of the next higher class during that interval, or, if this is preferred, the size-classes can first be decided on, and the length of the felling rotation made to correspond by observing the rate of growth.

Thus, suppose that the diameters of the size-classes determined on are:—below ½′, ½′ to 1′, 1′ to 1½′, 1½′ to 2′, and over 2′ feet, that trees of 2 feet diameter have attained their maximum utility, and that it has been ascertained that the rate of growth is such that in about 30 years the trees of lowest dimensions in one class attain the dimensions of the next higher class. This period of 30 years would, therefore, be taken as the length of the felling rotation. The capital in a forest so composed, when normally constituted, would consist of *four* age-classes, each occupying one-fourth the area. Thus in one acre, containing 43,560 square feet, each age-class would cover one-fourth of this area or 10,890 square feet. There would be no crops composed of trees of over 2 feet diameter, as in theory these would be exploited as soon as they reached that size:—

Class I. stems over 2 feet diameter, occupying	Nil.	
„ II, „ „ 1½ to 2 feet diameter, occupying	10,890	square feet.
„ III, „ „ 1 to 1½ „ „ „	10,890	„
„ IV, „ „ ½ to 1 foot „ „	10,890	„
„ V, „ below ½ foot „ „	10,890	„
		„
TOTAL	43,560	

In order to ascertain the number of stems of each class, it will be necessary to measure the areas covered by the crowns of the tree. We will assume these to be as follows:—

Class I	900	square feet.
„ II	625	„
„ III	400	„
„ IV	100	„
„ V (dominant trees)	25	„

The number of trees of each class, when the capital has been constituted, is evidently the area covered by the class (10,890 square feet), divided by average area covered by one crown of that class, and would therefore be as follows:—

Class I	0	trees.
„ II	17	„
„ III	27	„
„ IV	108	„
„ V	435	„

In the course of 30 years, according to the assumption made, the trees in each class would attain the dimensions of those in the next higher class.

If, therefore, during the interval we fell the difference in numbers the capital will remain unaltered. This operation may be shown as follows :—

Class.	Felled.	Reserved.	Total.
I	17	...	17
II	10	17	27
III	81	27	108
IV	327	108	435

At the end of the thirty-year period, the crop on the ground would thus be the normal capital. The place of the young growth in Class V at the commencement of the period would be taken by a new stock of seedlings. This will be possible because the area covered by the trees reserved, it can be calculated, will only amount to three-fourths of the surface of the acre.

This method is applied in the same way as the selection method, the forest being divided, as in that method, into whatever number of annual or periodic coupes the felling rotation requires, and the number of trees to be felled each year prescribed. In doing this it would, however, be necessary to state the number of each size or age-class to be felled as explained above.

When first applying such a method to a forest, the number of stems to be felled would not of course be as in the example given the difference between the numbers of trees in the different classes. In such a case, the number of stems *to be left* on the ground having been determined in the manner explained, reference would be made to the results of the enumeration and the number of stems deduced from this.

Thus, suppose an enumeration of the block or compartment, containing 200 acres, to be exploited gave the following results :—

Class I	trees .	470 trees;	or	2 trees per acre.
„ II	„ .	5,656 „	„	28 „ „
„ III	„ .	3,388 „	„	17 „ „
„ IV	„ .	26,690 „	„	133 „ „
„ V	„ .	127,400 „	„	637 „ „

In order that the capital should be constituted in the manner required, it would be necessary in the coupes in that compartment at the first operation to fell and reserve, on an *average per acre* of the coupe—

Of Class	I	trees ; to fell	2	trees ; reserve	0	trees.
„	II	„ „	11	„ „	17	„
„	III	„ „	0	„ „	17	„
„	IV	„ „	15	„ „	118	„

There would be reserved of Class IV, 118 trees, instead of 108, to make up for the 10 less trees than the prescribed number reserved in Class III.

It need hardly be said that, where dealing with a mixed crop, the felling of each different species should not be separately prescribed, as has been sometimes done in working-plans in India. At most, the relative proportion of each kind should be prescribed. This method of treatment has been seldom described, though it has been largely applied in certain parts of France. It is stated to be particularly well-suited to hill forests in which the uncovering of the soil leads to a dense growth which prevents reproduction.

The Selection Method.

The General Plan.—The selection method consists in felling here and there, as they are found growing, according to certain cultural rules, such a proportion of the exploitable trees as it is calculated or estimated will not exceed the possibility of the forest. Theoretically, every acre of the area treated should be visited each year, and the exploitable trees cut out, but as, in this case, the trees felled would be so scattered that it would not be profitable to remove them, it is usual to fell over a portion of the area each year and thus work over the whole area in a given period, at the end of which the portion first worked would again be taken in hand. The Working-Plan thus prescribes the number of years in which the whole area is to be worked over, the area which is to be worked each year, or short period of years, and limits the quantity of material which is to be removed from this area, to a figure which is presumed to be within the total production on the whole area in the same period.

Thus the working-plan might be that each year there will be felled, by the selection method, on a portion, one-tenth or one-fifteenth, for instance, of the area of the forest such and such a number of trees.

Limitation of the fellings.—The limitation of the material to be removed may be effected in several ways, *viz.*:—

By cultural rules only.

By, in addition to cultural rules, prescribing the quantity of material or the girth or diameter limits of the trees to be felled.

By prescribing the proportion which the number of trees

felled is to bear to the number of trees of certain dimensions in the standing stock.

These methods accomplish what is desired more or less indirectly. When greater precision is required the limitation may be made directly by prescribing the number of trees or the volume of material which is to be felled. This may be calculated by the following methods:—

The rate of growth.
Enumeration of the trees.
Estimation of the production of the soil.
Successive valuations of the standing stock.
The method of relative proportion.
The method of proportionate volumes.

These various processes of limiting the fellings will be described separately in the above order.

Another method, that of tables showing the yield of different classes of forest and soil, it is unnecessary at present to deal with, as no such tables for Indian forests exist at present.

It may be useful to note that in applying these methods, the yield need not be separately calculated for each species, as is frequently done. The enumeration would show the relative proportion of each species, and in the working-plan the fellings of each may be prescribed in that proportion. Thus, suppose, that $\frac{1}{3}$ of the species enumerated were of species A, and $\frac{2}{3}$ of species B, and that the possibility was fixed at, say, 600 trees a year, the plan might prescribe the felling of 200 trees of species A and 400 of species B.

Limitation by cultural rules.—The *cultural rules* prescribing the method of making the fellings should be easy to understand and of general application, and should ensure that, as far as possible, more material than the forest produces will not be removed. Where the fellings are very light nothing more is required than to fix the lowest diameter of the trees felled, or to limit the fellings to the removal, here and there, according to the principles of the selection method, of such trees as are over-mature, or are above a certain size in girth.

Such general rules are quite sufficient to limit the fellings where the crop is already constituted according to the selection type or where there is a good executive staff. But when, as generally happens, this is not the case, there is great danger of such simple rules being unintelligently or unscrupulously applied.

To meet this difficulty it is well, where dealing with large irregular forest masses, to supplement the general rules by hints or directions, conveyed in the "Remarks" column of the description of each block, regarding the nature of the fellings to be made, as in the following example :—

Description of Compartments.

Name of Block	Area in acres				Configuration and aspect.	Soil	Stock	Suggestions as to treatment, &c.
	Wooded.	Grass blanks	Unproductive ground	Total area				
Matkangra	102	32	25	159	Cut up by numerous sharp-edged ridges. All aspects are represented Gradients 28° 30′ Altitude 6,000′ to 6,300 feet	Granitic Sandy clay, very deep.	About one fifth open grassy blanks, with a few mature ban, rai, lauri, &c Stocked portions contain mature oaks and kokat, with a few rai, ban, ayar, and burans except in nalas where some saplings are found Nearly all old trees unsound	The mature trees on the edges of blanks, as well as those on the open grassy slopes, should be left as seed-bearers, and the few trees which can be taken out should only be felled along nalas Grass blanks might be planted up.

Cases in which the fellings may be regulated by cultural rules.—The *cultural method* of organizing selection worked forests is especially applicable to the irregular and partially-ruined condition of forest which has so frequently to be dealt with in India, in which enumeration surveys would be waste of time and money, and to forests in which it is only desired to retain the cover on the ground In the latter case, the fellings would, of course, be limited to the removal of dead or decaying trees.

But the method applied in the mannere explained above is attended with the drawback that ther is no means of checking on paper its correct application. The only outside check that can be exercised over this application of the method is with regard to the *area* exploited, and all the prescriptions on this subject might be rigidly adhered to, while the far more important cultural rules were being misapplied by unintelligent or unscrupulous executive officers. Hence it is always preferable, where possible, to determine beforehand the quantity of material that may be removed with safety and to limit the fellings to this maximum quantity, in addition to limiting them by cultural rules.

Thus, suppose, it was ascertained by experiment that the average production of the forest, in the present condition of the crop, was 40 to 50

cubic feet per acre per annum, and it was desirable to increase the stock on the ground, the fellings might be limited to 20 cubic feet per acre per annum *on an average for the whole area*, that is to say, if the area was, suppose, 1,000 acres, to 20,000 cubic feet. *This maximum amount could be felled in each annual coupe.*

Limitation determined by the rate of growth.—It was explained, when discussing the formation of the forest capital at page 6, that in a normal forest the number of trees which attain exploitable dimensions in a given period of time, practically represents the possibility of the forest for that period. As it is possible to estimate, for a short period in advance, the number of trees in a forest that will become exploitable, and to determine with some accuracy whether the crop approaches the normal type or not, the principle may, in some cases, be usefully applied to selection working in forests in which the trees can be enumerated.

Thus, suppose, we had to deal with a forest in which trees of all ages are well represented and in which the rate of growth was such that in the course of 30 years trees of 4½ feet girth attained the exploitable girth of 6 feet. In 30 years all the trees now 4½ to 6 feet in girth, would be removed, either in the thinnings or principal fellings. Therefore, provided that trees of all sizes from 4½ to 6 feet girth were felled, the annual possibility would amount to *one-thirtieth* of the total number of trees above 4½ feet in girth standing in the forest.

As an adjunct to cultural rules, and subject to such restrictions as common sense and a knowledge of sylviculture dictate, the principle here sketched out may often be applied with advantage. It may even, with some sacrifice of accuracy, be used to limit the fellings to be made in forests in which, for any reason, it is inexpedient or impossible to carry out an enumeration survey in advance.

In such cases, all that would be necessary would be to determine the average rate of growth of the principal species when approaching maturity and the length of the felling rotation, and to prescribe, by a simple rule, the proportion of the trees above certain dimensions growing in each coupe that might be removed at the time of felling.

Thus, suppose, that in the last example it was determined to work over the whole forest in ten years by annual coupes of *one-tenth* of the area. Each of these coupes, it might be assumed, would contain about *one-tenth* of the trees growing in the whole area, so that to fell *one-third* (that is, ten times one-thirtieth) of the trees in a *coupe* would be the same (as regards the number of trees felled) as to fell *one-thirtieth* of the trees in the whole forest.

A rule, therefore, prescribing that *there will be felled each year on one-tenth of the area, in succession, one-third of the trees of from 4½ to 6 feet in girth growing on that area,* would have much the same effect, as regards limiting the fellings, as if the whole of the trees in the forest were counted in advance and the exact number to be felled each year prescribed.

It is unnecessary to discuss in detail either the errors involved in this method, or the cases in which it is applicable. There are undoubtedly many instances in which the method might be applied, and in which it would lead to more accurate results than any attempt, with the means usually available, to enumerate the whole stock in advance.

By an enumeration of the trees.—The principle explained in the previous paragraph may also, it is obvious, be applied to the results of an enumeration of the growing stock made in advance. The number of trees of each class and their rates of growth being known, it is possible to estimate with fair accuracy the number that will pass from one size-class to the next higher class, or become exploitable in a given period of time. The number of trees that will be available annually for felling during this period of time is thus known.

As an example, suppose a forest containing the following stock of exploitable species in which the average diametral increase of the trees when approaching the exploitable size of 2 feet in diameter is 0·2 inches,—

Class I,	trees	over 24 inches				in diameter,	24,741	trees.
„ II,	„	18 inches to 24 inches			„	„	17,867	„
„ III,	„	12	„	18	„ „	„	19,467	„
„ IV,	„	6	„	12	„ „	„	192,827	„
„ V,	„	below 6 inches			„	„	968,000	„

In the course of 30 years the growth in diameter will be $0{\cdot}2 \times 30 = 6{\cdot}0$ inches; consequently, in that time, the trees of Class II, now 18 inches to 24 inches in diameter, will be replaced by those in Class III, and may therefore be removed. Most of these trees will have attained the exploitable diameter, but a certain number being suppressed or crowded out will, unless felled while still below the exploitable size, disappear. Assuming, therefore, the stock to be complete and normal, we may fell in the course of 30 years, without exceeding the possibility, all the trees now in Class I and Class II, that is to say, $24{,}741 + 17{,}867 = 42{,}608$ trees, or at the rate of $\frac{42{,}608}{30} = 1{,}420$ trees a year. All the trees in Class II could not, it should be remarked, attain the exploitable size; a certain number would be suppressed or would, in the ordinary course, be crowded out.

But provided trees of 18 inches and over could be felled, the above number might be removed.

The above calculation represents the present possibility *where the crop contains a sufficiency of trees of the lower age-classes.* But in a forest where, for example, all the trees were mature or were approaching maturity—and this is the condition of crops which have not been worked or have been under-worked—fellings determined in this manner would remove in a single period not the possibility but the whole capital of exploitation.

Consequently, in India, it has hitherto generally been the custom to base the calculation on the number of trees *already* exploitable and to limit the annual fellings to this number, divided by the number of years in which these trees could be replaced by those in the next lower size-class. Thus, in the example taken above, the annual fellings might be limited to 24,741, divided by 30, or to 825 trees.

The calculation can, however, be made in a less rude fashion. The maximum number of trees that can attain exploitable dimensions each year in the immediate future is the total number in Class II (the size-class next below the exploitable size) divided by the number of years required for trees of the lowest dimensions of this class to become exploitable. This is then the possibility of the crop for the time being, and it must be estimated—from the average production of other similar forests for instance—whether this is above or below the normal or potential possibility, and the number of trees to be felled, increased or diminished accordingly. With a view to estimating whether the age-classes are suitably graduated or not, the number of trees in this class may be compared with those in the next lower and higher classes. Finally, as regards the sufficiency or insufficiency of the already exploitable stock, it must be remembered that in a normal forest in which the age-classes occupied equal areas, there would be no trees above the exploitable size on the ground immediately after a felling, and only one year's growth immediately before the next felling. In a selection-worked forest, owing to the trees of different ages being distributed all over the area, this would only be the case where the whole area of the forest was worked over each year. Ordinarily, however, this area is gone over in a number of years, and consequently it is only on the last portion of the area felled over that there is one year's growth of exploitable trees, on the next area there is two years' growth, on the next three, and so on up to the limit of the felling rotation.

Knowing, therefore, the number of trees of Class II which annually attain exploitable dimensions, we can calculate the normal exploitable stock and thus ascertain whether the actual stock is sufficient or insufficient or superabundant. In the latter case, the excess stock can be utilised at once or in several years, according as the lower stages of growth are sufficient or insufficient.

The crop taken as an example above will serve as an illustration of this method of analysis. The number of trees below exploitable dimensions, 18 to 24 inches in diameter, being 17,867, the greatest number of trees (the 24,741 trees over 24 inches are already exploitable) which can attain exploitable dimensions each year in the immediate future is $\frac{17,867}{30}$ or 596 trees. This number, divided by the wooded area of the forest expressed in acres, would give the average annual production of mature trees per acre. Assuming this area to be 1,200 acres, the average annual production per acre would be $\frac{596}{1,200} = 0{\cdot}5$ trees or half a tree per acre. It would be possible to compare this figure with that of other similar forests, and thus ascertain whether the production was above or below the average. We will suppose that it is found to be considerably below the average. It would follow that the forest is deficient in trees of Class II, and also it would appear of Class III, as the number is about the same. Class IV would, however, appear (a rough approximation only is possible) to be well constituted, and so would Class V. It may, therefore, be accepted that for (we will assume) the next 60 years until the crops of Class IV begin to be exploitable, the fellings must be made with caution, but that by that time the crop will be fairly complete if not altogether normal. This 60 years is in fact a preparatory period during which a provisional plan is required.

As regards the sufficiency or otherwise of the existing exploitable stock, we will suppose the felling rotation adopted to be a very long one, 30 years, and that the whole area is subdivided in 30 portions of, on an average, one-thirtieth of this area. Every year there would pass from Class II into Class I and become exploitable something less than 596 trees, or on one-thirtieth of the area $\frac{596}{30} = 19$ trees. Consequently, at the end of the first felling rotation and ever after, the exploitable stock on the ground would be :—

On the area felled over			30 years before		30 × 19 trees.
,,	,,	,,	29	,,	29 × 19 ,,
,,	,,	,,	28	,,	28 × 19 ,,
&c,			&c.,		&c.,
,,	,,	,,	2	,,	2 × 19 ,,
,,	,,	,,	1	,,	1 × 19 ,,

The total number of exploitable trees left stand would therefore be—

$$19 \times (30 + 29 + 28 + 2 + 1) = 8,835 \text{ trees.}$$

Therefore the surplus stock is 24,741 — 8,835 = 15,906 trees.

As, however, the crop is defective in trees of Classes II and III, the felling of this surplus ought to be spread over the whole length of the

preparatory period of 60 years. It would, therefore, be only permissible to fell $\frac{15,900}{60} = 265$ trees of the surplus stock each year or, in all, 265 + 596 or 861 as a maximum each year.

The maximum number of trees becoming exploitable each year in the above example, *viz.*, 596 trees or ½ a tree an acre, is below the normal, which we may suppose, it is ascertained, should be not less than one tree an acre or 1,000 trees. In this case, it would be desirable to preserve on the ground a corresponding stock which would be with a felling rotation of 30 years $\frac{1,000}{30}\{30 + 29 + \ldots . 1\} = \frac{1,000}{30}\{30 + 1\}\frac{30}{2} = 15,500$.

In this case, it would only be permissible to fell $\frac{24,741 - 15,500}{60} = 154$ trees of the surplus stock each year during the preparatory period, so that the fellings would be reduced to 154 + 596 = 750 trees a year, or it might be that the exploitable stock was *deficient*. If there were only, we will suppose, 4,741 exploitable trees instead of 24,741 trees, and that the stock required was, as in the last case, 15,500 trees, the forest would be deficient in mature stock. In the course of 60 years, the exploitable stock should be augmented by the difference 15,500—4,741 = 10,759 trees, or at the rate of $\frac{10,759}{60} = 180$ trees a year. In such a case, the number of trees in Class II remaining the same as before, there ought not to be felled each year more than 596 — 180 = 416 trees.

'By the productive capacity of the soil.—The method last described meets the difficulty, so freequently met with in India, involved in calculating the possibility in the case of a mixed crop containing only one or two saleable species, such as the *teak* forests of Burma, the *deodar* forests of the Himalayas, and many others. The more accurate methods employed in European Forestry are not intended to deal with such cases, and it is a question whether they can be made use of except where the whole crop is saleable.

The most commonly used of these methods consists in determining the number of trees to be felled by estimating the production of the soil in whatever way this may best be done, if possible, by ascertaining the mean increment of a complete crop of the exploitable age on the same soil, and then dividing this figure giving the production by the volume of an average tree of the exploitable age.

Thus, if the average annual production of the soil was found to be 120 cubic feet per acre, and the volume of an average exploitable tree was found to be 60 cubic feet, the possibility would be fixed at two trees per acre per annum.

As, however, each portion of the forest might not be able to furnish the number of exploitable trees per acre so determined, *there is no lower limit fixed with regard to the diameters of the trees to be felled.*

By this means, a quantity of material less than the possibility is removed from those portions of the forest which are poor in large trees, and more than the possibility from those portions in which large trees are more abundant than the average. In this way, the regularisation of the crop is secured.

The method may best be explained by an example.

Let us suppose the forest area which it is wished to organize by the selection method, and for this purpose to ascertain its possibility, to consist of 1,810 acres of mixed forest of conifers and oaks, all of the principal species being saleable. We will also suppose that an enumeration of the trees has been made, and that the forest has been found to contain 263,520 trees of all sizes, ages, and kinds, the proportion between the firs and oaks in each 100 trees being 90 firs to 10 oaks; also that the average number of stems of all ages per acre is 145, as follows :—

Small trees under 12″ in diameter	91
Medium-sized trees 12″ to 24″ in diameter	46
Exploitable trees over 24″ in diameter	8
Total stems per acre . .	145

The production of the soil can be roughly estimated as follows :—

It may be assumed that the same soil, when entirely covered with trees of a certain species, produces a constant quantity of material per unit of area each year. Suppose that a fir tree of two feet in diameter is exploitable, and that numerous experiments made in the forest have shown that a tree of these dimensions requires a circular space of 25 feet in diameter. We will also assume that it has been determined by experiment that the mean volume of wood in a typical fir of the above dimensions is 135 cubic feet, and that it requires 150 years for it to attain those dimensions.

The productive capacity of the soil or its capability will, in the above case, be as follows :—

The number of exploitable trees that can grow on one acre will be $= \frac{\text{square feet in one acre}}{25^2} = \frac{43,560}{625} = 70$ trees, and the volume of wood in these trees will be $70 \times 135 = 9,450$ cubic feet. This is the growth of 150 years. The average mean annual production of each acre, therefore, amounts to $\frac{9,450}{150} = 63$ cubic feet.

The rate of growth is exceedingly difficult, we may say impossible, to determine accurately in a selection-worked forest, because of the inequalities in the rates of growth of the trees in such forest at different stages of their existence. But this is no reason for not attempting to estimate it, making due allowances for inaccuracies.

It is hardly necessary to state that if there existed in the neighbourhood of the selection-worked forest a patch of mature high forest growing under similar conditions as to species and soil, the productive capacity of the soil could be more easily and with greater accuracy determined from this high forest growth by felling a known area and cubing the wood produced. If this was impossible, the number of exploitable trees that the forest could contain could at least be determined from it.

Assuming that it is found by survey that the area of the blanks, roads, occupied lands, &c., in the forest, on which the crop of trees may be considered as non-existent, has an area of 210 acres. The productive *wooded surface* would thus be reduced to 1,600 acres, and the average annual production of the whole forest area would then be 1,600 × 63 cubic feet = 100,800 cubic feet. We might stop here and prescribe the removal annually of this volume of wood—which is by assumption equal to the annual production—from the entire area, trusting that the forest would produce the same quantity and thus repair the loss. And in a forest of which the crop was perfectly constituted and contained trees of every size and stage of growth in the necessary proportions, no harm would result from this procedure. But such a state of things is not often found, and it is impossible to tell whether such a state exists or not, whether there are, for instance, a sufficient number of trees of 2 feet in diameter to furnish 100,800 cubic feet of wood *each year* during the time that is required for the trees of the next (say 1½ feet diameter) stage to attain the exploitable dimensions, and that the trees of the next stage below that again, say 1 foot diameter, are sufficient in their turn to replace those, and so on.

The yield must therefore be fixed by the *number of trees*. The annual production of the soil being 63 cubic feet per acre, and an exploitable fir tree of 2 feet in diameter having a volume of 135 cubic feet, the annual yield of each acre in number of trees will be $\frac{63}{135} = 0{\cdot}47$ of a tree, and for the entire area of the forest of 1,600 acres (excluding blanks) the annual yield in trees will be 0·47 × 1,600 = 752 exploitable trees.

It would not be possible without great loss and inconvenience to spread the fellings each year over the entire area of the forest. We will suppose, therefore, that the annual fellings are limited to one-tenth of the entire area, and that this number of years is allowed to elapse between successive fellings in the same area. In this case, and as we have assumed that there are in every 100 trees 90 firs and 10 oaks, the whole provisions of the Working-Plan as regards the fellings to be made will be as follows :—

"Each year there will be felled by the selection method on successive annual *coupes* of one-tenth the area of the forest 752 trees, *viz.*, 677 firs and 75 oaks."

No limit as to the *size of the trees felled need be fixed*, but in each *coupe* the dead or dying trees will be felled first and then the largest trees that are wanting to complete the prescribed number, which in no case would be exceeded. This system of not fixing any limit to the *size*, while strictly limiting the *number* of the trees felled, is characteristic of the method. By this, in the poorer portions of the forest the crop will become richer. Where the trees are small, the same number of trees will contain a less volume of wood; while, where the crop is rich in large trees, a greater volume than the normal production will be felled, which is what is required. Thus, in the case we have assumed, the crop will tend to become uniform throughout and to assume the normal state of a crop exploited at an average age of 150 years, which is the number

of years that the trees require in order to attain the dimensions of 2 feet in diameter, which has been taken as the exploitable size.

There is no danger of all the large trees in the forest being felled at once, because all are not found on one point.

An examination of the valuation survey records, showing the number of trees of each size-class, will show the average age or size at which trees have been exploited; for trees above this size will be rare. It will also show at once whether or not there are trees of the various size-classes in sufficient numbers, so far as can be judged, to replace the mature trees when felled, so as to enable the forest to remain always more or less the same as regards its capability of furnishing the number of trees that is required.

By successive valuations of the standing crop.—This method, so far as the calculation of the possibility is concerned, is exceedingly simple in theory, but it is difficult to apply in practice, because it necessitates accurate estimations of the crop, and these have to be constantly repeated. The method consists in ascertaining the production of a forest by two *very accurate* successive valuations made at intervals of a few years apart. The difference, together with the material removed during the interval between the two valuations, represents the production during that period. Thus, suppose, the total quantity of material in a forest area was found to be on a certain date—

	Cubic feet.
Say the 1st January 1880	12,000,000
And ten years later, 1st January 1890 . .	15,000,000
Difference . . .	3,000,000

It is evident that the difference represents the quantity of material produced in the interval of ten years, and that for the present it would be safe to assume that the average *annual* possibility was $\frac{3,000,000}{10}$ or 300,000 cubic feet a year. If, as would generally be the case, fellings had been made in the interval, the volume of material removed would, of course, be added. Thus, if in the above case:—

	Cubic feet.
Material removed by the fellings was .	2,000,000
Balance material produced during interval would be	5,000,000

Having calculated the possible future yield from the rate of growth, the future fellings may be determined without

any reference to rotations or periods, by determining what proportion of the existing stock in the forest may be felled during the felling-rotation. Thus, in the last case, the existing stock at the first valuation was 12,000,000 cubic feet, and the average *annual* production during the ten following years was 500,000 cubic feet a year, which is equivalent to $\frac{1}{24}$ of the initial stock. If the next felling-rotation was ten years, there would, therefore, be removed from each *coupe*, once in the course of the felling-rotation, $10 \times \frac{1}{24}$, or 2·4 of the existing crop, as ascertained at the valuation, in that compartment. This is an essential feature of Gurnaud's method. The calculation is not based on doubtful factors, such as the calculated rate of growth, or confused by references to hypothetical rotations, &c.

As in this method the possibility is determined by means of successive valuations of the standing stock made at intervals of a few years only, it is necessary, in order to ascertain *the exact* volume of the growth in the short interval that is allowed to elapse between the two valuations, to count and estimate the volume of the trees in the standing stock with very great precision. This is perhaps the only difficulty in the way of introducing the method very generally on a large scale into India.

By relative proportion.—This method is based on considerations similar to those which influence the determination of the possibility of regular high forests composed of regular series of crops, each unit occupying the same extent of area, of all ages up to the number of years comprised in the normal rotation.

These crops may be classed under one of three groups, each of which would in the above case occupy one-third of the total area, *viz.*:—

I.—Full-aged crops, of which the ages will range downwards to two-thirds of the total number of years comprised in the rotation.

II.—Medium-aged crops, of which the ages will range from two-thirds to one-third the number of years in the rotation.

III.—Young crops, aged less than one-third the number of years in the rotation.

It is evident that in a regular high forest stocked in the above-described manner, in which the elements of production are everywhere identical, a sustained yield will be assured,

if each group is in its turn regenerated during one-third the number of years in the rotation. The annual yield can therefore be determined by dividing the volume of material contained in the full-aged crops, with the addition, if possible, of their increment, by the number of years in one-third of the rotation. When a forest does not contain crops of all ages covering equal areas, it may be necessary to make transfers from one group to another, so that the areas to be exploited in equal intervals may be equalised.

If, for a regular, a selection-worked high forest be substituted, it is still possible, notwithstanding the apparent irregularity of the latter, to distinguish in it these three groups, *viz.*, of full-aged, medium-aged, and young crops. But the areas respectively stocked with these three groups, instead of forming compact blocks, are very small, and are scattered and intermixed in the most irregular manner. Usually it is impossible to ascertain what area each group occupies, so that, instead of working by the areas they cover, it is necessary to determine whether the volumes of material in each group are in normal proportion to each other. It has been ascertained that in a normally-stocked high forest divided into three age-groups, as explained above, the volume of material in the crops of the second age-group is equal to three-fifths of the volume of the crops in the first age-group.*

Therefore, whenever in a selection-worked forest the volume of the material in the group of full-aged crops is equal to five-thirds of the corresponding volume of the group of medium-aged crops, it may be admitted that these two groups correspond to the first two corresponding age-groups of a normally-stocked high forest, and if it is arranged to exploit the group of full-aged trees in the first third of the number of years corresponding to the age of the exploitable tree, there will be no risk of a decrease in the yield during the following third, when the trees which, at the outset, constituted the group of medium-aged crops will be felled. Besides, all risk of overfelling may be avoided by

---

* That this is very approximately correct may be seen from figure 1 in Chapter I by actually counting the little rectangles representing the production, or in a similar figure by assuming the average annual growth per acre to be uniform and to equal from year to year.

If a be the area, v the average annual production per unit of area, and n the number of years in the exploitable age, the volume of wood in the first group would be—

$$\frac{\frac{1}{2}\,n\text{-}v + n\,v}{2} \times \frac{a}{3} \quad \text{and in the second group} \quad \frac{\frac{1}{2}\,n\,v + \frac{1}{2}\,n\,v}{2} \quad \frac{a}{3}$$

$$\text{Hence} \quad \frac{\text{Volume of wood in first group}}{\text{Volume of wood in second group}} = \frac{\frac{1}{2} + 1}{\frac{1}{2} + \frac{1}{2}} = \frac{5}{3}$$

omitting to take into account the increment of the full-aged crops during the period prescribed for their exploitation.

In practice, it is more convenient to base the classification on some more easily ascertainable factor, such as the size (circumference or diameter) of the trees, and thus prescribing the maximum limits in regard to size for classification in the groups of medium-aged and young crops. Usually the operation can be still further simplified by determining the size corresponding to the age of exploitability, and assuming that the full-aged and medium-aged crops are made up, respectively, of trees exceeding two-thirds the size of the exploitable tree, and of trees from one to two-thirds of this size. The above considerations indicate a method which it is very easy to put into practice for calculating the yield of selection-worked forests.

First of all, the age of exploitability and the circumference or diameter corresponding to it must be determined. Next, a valuation survey of the forest should be made, and the trees and their volumes classed as follows:—

I.—In the group of full-aged crops, when they are more than two-thirds the size of the exploitable tree.

II.—In the group of medium-aged crops, when they are between one and two-thirds this size.

There is no need to count the trees which on account of their sizes should be placed in the group of young crops.

If, when the classification is effected, it is found that the total volume of trees in the full-aged crops is five-thirds of the total volume of trees in the medium-aged crops, it may be assumed that the full and medium-aged crops are in the normal proportion. In this case, it will be understood from what has been written above that a sustained yield will be assured if the possibility is calculated by dividing the volume of the full-aged crops by one-third the number of years in the age of exploitability. Since in the calculation no allowance is made for the increment, it may safely be assumed that the yield so calculated will never need to be reduced in subsequent revisions.

But the normal proportion of 5 to 3 between the volumes of the groups of full-aged and medium-aged crops will not often be found to exist in India. There may be—

(*a*) Excess of full-aged crops.
(*b*) Excess of middle-aged crops.

In the first case, where the volume of the old crops is abnormally large, the state of vegetation of the trees of the smallest dimensions in the full-aged crops should be examined with a view to ascertaining whether it will be practicable to keep them standing till the time when the medium-aged crops will be exploited. If it appears that this can be done, one or more of the classes of full-aged crops should be placed in the group of medium-aged crops. In other words, it should be sought to make up for the deficiency of medium-aged crops by adding to them a given amount of wood from the full-aged crops.

In the second case, where the volume of medium-aged crops is abnormally large, it should be ascertained whether the largest trees in the medium-aged crops cannot be exploited during the period assigned for the exploitation of the full-aged crops, without causing any considerable loss, and it should then be sought to make up for the deficiency of full-aged crops by transfers.

When the possibility has been determined, the length of the felling rotation during which the whole forest will be gone over by the selection fellings should be fixed. In the present case it should, however, be a sub-multiple of one-third of the exploitable age.

The above-described method of determining the possibility of selection-worked high forests is stated to have the following advantages:—

(*a*) On the occasion of each revision of the Plan, it allows the possibility to be fixed according to the state of the crops.

(*b*) It tends to introduce the normal proportion between the different age or size-classes of trees.

(*c*) It helps to secure a sustained yield so far as the composition of the forest renders this possible.

By proportionate volume.—This method of determining selection fellings by volume of material, known in France as the "Système Masson," is based on the assumption that, as in a high forest worked by the regular method we always fell a certain definite proportion of the crop on the ground, so in a selection-worked forest, by always felling a certain percentage of the crop on the ground, we can secure the fellings being within the possibility.

Applying this latter theorem to the case of the forest we have already taken as an example, a fairly homogeneous fir forest containing

a wooded area, excluding blanks, of 1,600 acres—in which the average annual production or capability of the soil has been ascertained, in the manner explained in the previous example, to be 63 cubic feet of wood per acre a year—worked by the regular method on a rotation of 150 years, each acre would produce during the rotation 150 × 63 = 9,450 cubic feet, and the volume of wood on the ground at any time during this rotation would, on the whole area, be *one-half of 1,600 × 9,450* or 7,560,000 cubic feet. Now, the area of the forest being 1,600 acres, and the number of years in the rotation 150 years, the size of the annual *coupes* (the forest being worked by the regular method) would be $\frac{1,600}{150}$ = 10·66 or 10⅔ acres, and the volume of material felled each year would be 10⅔ × 9,450 cubic feet = 100,800 cubic feet, or 1·33 per cent. of the total material on the ground on the whole forest.

Similarly, were the rotation reduced to 100 years, the volume of wood on the ground would be $\frac{63 \times 100 \times 1,600}{2}$ = 5,040,000 cubic feet, while the material removed at each felling, made on an area of $\frac{1,600}{100}$ = 16 acres, would still be 16 × 63 × 100 = 100,800 cubic feet. In this case, 2 per cent. of the material on the ground would be felled.

Therefore, in a high forest worked by the regular method there is a fixed proportion, depending on the length of the rotation, between the volume of material felled each year and the volume of material on the ground, or the "*wood capital*" of the forest. This proportion following a general law varies inversely to the length of the rotation, that is to say, it is higher as the rotation is shorter and *vice versâ*.

Let us suppose that it is wished to ascertain the possibility, by the volumetric method, of the fir forest, already taken as an example, of 1,600 acres, excluding blanks, for which it has been ascertained that the productive power of the soil is 63 cubic feet of wood a year. The exploitable size of the trees, let us assume, as before, to be 2 feet in diameter, and that it requires on an average 150 years for these trees to attain these dimensions.

Under these conditions the material on the ground being, as stated, $\frac{150 \times 63 \times 1,600}{2}$ = 7,560,000 cubic feet, and the size of the annual *coupes* being $\frac{1,600}{150}$ = 10⅔ acres, there would be felled each year 10⅔ × 63 × 150 = 100,800 cubic feet of wood or 1·33 per cent. of the total material on the ground. On the assumption that, worked by the selection method, the yield would be the same, it would be possible, without exceeding the capability or reducing the "wood capital," to fell 1·33 of the material on the entire area, or 13·3 per cent. of the material standing on one-tenth of the area every ten years, supposing that number of years to be taken as the interval between the successive fellings made in each area and the forest divided into ten *coupes*, or, if not as many times 1·33 per cent. of the material as there are *coupes* or years in the interval between the successive fellings made in each area. Now the wood capital will be far from being exactly and evenly distributed over all points in the forest; some of the compartments would be rich and some poor. Each year there would, however, be exploited successively in each coupe in its turn 13·3 per cent. of the material on the ground without ever exceeding this figure, but so as to fell exactly 100,800 cubic

feet of wood. If the 13 3 per cent. of the material in a coupe was more than 100,800 cubic feet, the surplus would be left for the following year; if less, the prescribed 100,800 cubic feet would be completed by taking something from the next coupe. In this manner, what was felled in a compartment would always bear a fixed ratio to what existed in that compartment; from the rich compartment more would be taken, from the poor less, while the outturn remained the same from year to year.

Neat and exact as this volumetric method of calculating the capability may appear on paper, there are several drawbacks to its practical application, especially in Indian forests. It is certainly superior to other methods, in that it secures an absolutely equal outturn from year to year, but this in most cases in India is a matter of comparatively small importance. On the other hand, it not alone requires nice calculations based on exact enumeration and measurement of the whole standing crop, and this difficult and expensive undertaking has to be repeated periodically; but it also necessitates fellings requiring most careful supervision being made outside the *coupe* of the year.

Altogether the method is inferior to that of prescribing the capability by the number of trees. Any mistake in calculating the production of the soil—always a difficult calculation to make *practically*, however simple it appears in theory—would, under the volumetric method, have a very injurious effect on the crop. This, as already explained, is not the case where the number of trees without limit as to their size has been fixed. For, in this case, if the possibility was over-estimated smaller trees, and consequently a less volume of material than the calculated capability of the forest, would be felled.

The last two methods of determining the capability, it will be seen, are based on the assumption that all sizes of trees produced in the forest are saleable, and that the forests to which the methods are applied, are in the normal condition of selection-worked crops; that is, to say, contain a complete series of trees of all ages scattered more or less indiscriminately over the entire area.

There are, however, comparatively, few instances in India in which these two conditions are found. For where the demand is good the forests have, for the most part, been so overfelled and mal-treated that they contain little or no sound mature stock, and where the forests are still in good condition, there is generally no demand for any but the principal species.

Length of the felling rotation.—It will have been seen that the application of the possibility involves the determination of the *felling rotation*, and, in fact, the first step towards introducing order in the working consists in limiting the area to be worked over each year or period to definite areas. The object of this is to keep each separate felling within manageable limits, and to render the extraction of the produce easier and less expensive. Theoretically, every acre of the whole area worked ought to be visited each year and the exploitable trees cut out. But this would not be practicable, as the trees felled would be scattered over so large an area that it would not be profitable to remove them. It is, therefore, necessary to decide what time may be allowed to elapse between the successive fellings in one spot, and, having determined this, to divide the forest into a corresponding number of *coupes*, one of which would be exploited each year or period.

Where the possibility is calculated by the usual Indian methods, and prescribed by number of trees, it may be found convenient to make the length of the rotation equal to, or a sub-multiple of, the average number of years that is required for trees of the lowest dimensions of the second class to attain the lowest exploitable dimensions. In other cases, it may be found that the felling rotation should, for convenience, in order that the working-plan may be as simple in construction as it is possible to make it, be a sub-multiple of the *age*. This can easily be done with a little give-and-take as regards the exploitable age, and there is nothing wrong in such an adjustment, for it is ridiculous to suppose that the calculated rate of growth is so accurate that a few years either way will make a difference.

Within limits, it is a matter of comparatively small importance from a sylvicultural point of view at what intervals of time fellings are repeated in the same area. With a short interval, the area gone over at each felling is larger, and the quantity of produce removed is less per unit of area than with a long interval. But in this case the soil has a shorter time to recover. Practical considerations as regards transport, supervision, &c., should, for the most part, determine the question. The interval should be long enough to prevent injury to the crop from the too frequent repetition of fellings in the same area, and short enough to enable dead or dying trees to be removed in good time. In some of our

Indian Working-Plans, as long an interval as 30 years has been adopted ; usually, however, not more than ten or fifteen years is taken, and where the demand is intense, an interval of five years, or even less, may be adopted with advantage.

This *determination of the rotation of the fellings* and the corresponding *division of the forest into coupes* is essential to *methodical working.* Hitherto, in a great many cases in India, the application of this method, as it has been imagined, has merely consisted in the prescription of certain cultural rules without any corresponding annual coupes. Such plans miss the point; they do not serve the chief purpose of Working-Plans—the introduction of order into the working.

The fellings.—The fellings should always be prescribed for one complete felling rotation, as in that period they should pass over the whole area of the working circle that is to be exploited.

The area to be taken in hand is determined in the same way as has been described for simple coppice, by apportioning as many areas of equal forest resources as there are years or periods of years in the felling rotation. There is, however, this difference that these areas are often, when only one species out of many in a mixed crop is exploited, exceedingly large, so that instead of dividing each block into a number of coupes, each coupe may in some cases include a number of blocks.

The order of the fellings is of less importance in the selection method than in any other method of treatment. It will, however, always be convenient, and there is rarely any reason for adopting any other course, that the fellings should follow one another in regular order on the ground.

Whatever the system adopted to calculate the possibility, the fellings should be prescribed in a simple manner, and according to the principles of the selection method. These general rules might, where necessary, be assisted by cultural prescriptions for each compartment, in the manner already explained with regard to the cultural method of determining the fellings.

Restoration of an incomplete crop.—It frequently happens that the crop that has to be dealt with is so abnormal that the selection method, pure and simple, cannot be directly applied to it. In such cases, the crop should be subjected to fellings regulated by cultural rules, in the manner already explained, until the forest capital has attained the composition that is necessary.

The length of the period in which the restoration, practically speaking, can be made, can generally be determined from an inspection of the crop. At most, an enumeration of the sound stock in the forest, and a determination of the rate of growth of the principal species, are required. An example of the latter method has already been given.

In cases of restoration, the fellings of mature sound trees would be made with great moderation, and be strictly limited to the removal of such trees as were over-mature or approaching decay. Otherwise, if all exploitable trees were removed as they appeared, the object sought would be defeated; the wood capital on the ground would not increase. It is of especial importance to note this, because, as time goes on, there will be more and more sound trees to fell and less unsound. There is then great temptation to fell the sound trees and to neglect the unsound. This should be carefully guarded against if any good is to result from the restoration fellings.

It not infrequently happens in India that the demand is so uncertain and unequal that if fellings in fixed areas were prescribed in advance, the material felled would be liable to be left unsold. It has been sometimes sought to get over this difficulty by prescribing the areas to be taken in hand each year, but leaving the executive officers to make the felling heavy or light, according to the nature of the demand at the time. This, however expedient it may be from a mere revenue point of view, is nevertheless a faulty system. The nature of the crop determines the nature of the felling, whether this be merely an improvement felling or a selection felling. The object of transformation fellings during a provisional rotation is to assist in reconstituting the crop in its normal condition. To leave the intensity of the fellings to be regulated by the demand might have just the contrary effect, and might amount to prescribing the defeat of the chief objects which the Working-Plan should have in view.

The transformation fellings should be prescribed by area in the manner already explained with regard to fellings regulated by the cultural method.

Method of successive Regeneration Fellings.

General description.—The essential cultural feature of this method consists in the gradual removal by successive fellings of the crop to be regenerated. At the same time that this regeneration by successive fellings is being carried out, the crops about to be regenerated are subjected to selection fellings in order to utilize the material in them that is mature, while the

BENGAL SECRETARIAT LIBRARY.

crops which have been regenerated are subjected to clearings and thinnings.

The principal or regeneration fellings are prescribed by volume, that is to say, the number of cubic feet of material in the possibility having been ascertained, as many trees as, when felled and measured, were found to yield this volume, would be felled whenever, in view of the state of the crop, this was required for sylvicultural reasons.

Possibility; volumetric method.—Formerly (and at present in some cases) the volume of material to be removed annually was calculated by the *volumetric method*. This consists in calculating the total volume of material produced during the whole course of the rotation, and dividing this by the number of years in the exploitable age.

The manner in which this calculation is effected may best be explained by an example as follows:—Suppose a forest of, say, 1,600 acres, containing crops which it is wished to exploit at 120 years, divided into compartments or cultural subdivisions each of uniform age. The rotation would be divided into, say, four periods of 30 years each, and the area, *provisionally*, into four corresponding blocks, the first containing the crops of above 90 years old, the second those of 60 to 90 years, the third those of 30 to 60 years, and the fourth those below 30 years. Thus:—

1st Block.

Compartments	1 and 8	88	acres.	130 years old
„	2, 3, 5	184	„	120 „ „
„	4 and 9	68	„	110 „ „
„	6 and 11	84	„	100 „ „
„	7	48	„	90 „ „

And so on for the second and other blocks. This preparatory classification having been effected, the volume of material in each compartment is calculated, and to this is added the estimated future increment due to growth up to the time when the compartment will be regenerated, that is to say, 15 years' growth (the mean of the 30 years during which all the compartments would be regenerated, some at the beginning, some at the end of the period) for the compartments forming the first block, 45 years' growth for the compartments forming the second block, 75 for those forming the third block, and 105 for those in the fourth block, thus:—

1st Block,	actual volume	13,86,000	c.f.	estimated growth	15	years,	210,000	c.f.	total	1,596,000 c.f.
2nd „	„	393,000	„	„	45	„	720,000	„	„	1,113,000 „
3rd „	„	435,000	„	„	75	„	1,245,000	„	„	1,680,000 „
4th „	„	262,000	„	„			1,419,000	„	„	1,681,000 „
									Total ...	5,470,000 c.f.

Consequently, the total volume to be felled during the first period of 30 years, after which the calculations would be revised, would be $\frac{5,740,000}{4}$ -1,367,500 cubic feet, and each year $\frac{1,367,500}{30}$, 45,583 cubic feet. The permanent plan would then be drawn up by allotting to the first block to be regenerated during the period of 30 years, a sufficient number of the compartments containing the oldest crops to furnish, including their future increment during the period, 1,367,500 cubic feet of material. As those *temporarily* included in the first block will furnish 1,596,000 cubic feet, some of these would now be allotted to the second block instead. There would then be felled each year during the period, in the compartments forming the revised first block, 45,583 cubic feet of material. During this period, thinnings would be carried out in the compartments of the other blocks until the end of the 30 years, when the compartments in the second block would be taken in hand and dealt with in the same way.

This method of calculating the yield, owing to the difficulty of estimating the future growth with any degree of accuracy for long periods, is now seldom used except in certain parts of Germany, in Saxony especially, where, however, numerous improvements have been introduced in the manner of verifying the possibility and *in graduating the age classes*. These are, however, too complicated for adoption in this country.

Possibility; mixed method.—The volumetric method has been generally replaced by a simplified form known as the *mixed method*, the essential feature of which is the two-fold and simultaneous division of the exploitable age and the area into corresponding portions. In other words, instead of calculating the future growth of all the crops up to the time of their being felled, the total area is divided into a number of equi-productive *blocks*, and the exploitable age into a similar number of periods, during one of which each block would be regenerated; the yield of that block which is to be regenerated during the period is then calculated.

Thus, in the example already taken, instead of calculating the future growth of the crops in all the blocks, and then making transfers from one of these blocks to the other, so as to secure an equal yield throughout the rotation, the forest *area* would be partitioned off into four blocks, each about 400 acres in area, or, which it was estimated, were of equi-productive power and resources.

Thus block	I	would contain the mature crops.
Ditto	II	large pole crops.
Ditto	III	thickets approaching the pole stage.
Ditto	IV	young growth.

In this partition, the size of each block, where the elements of pro-

duction were not uniform, would be enlarged or reduced, as the case might be, so that all might yield much the same quantity of material. The yield of the first block only would then be calculated. This would be done, as in the previous case, by adding to the material on the ground the estimated growth during half the length of the period, in this case close on 15 years, and dividing the total so obtained by 30, the number of years in the period. The future growth is obviously taken as the average growth of the whole for *half* the period only, because some of the crops would be exploited at the beginning and some at the end of the period.

The trees in the block under regeneration would, as already stated, be generally removed gradually in several successive fellings. The first, the *preparatory or seed felling*, would be made with the object of opening out the forest so as to obtain a crop of young seedlings on the ground, and to give the seeds, as soon as they germinate, sufficient light to live. The extent to which this felling should interrupt the cover would depend on the constitution of the seedlings, the nature of the soil, and the climatic conditions. Where the cover was only slightly interrupted, the felling would be said to be *close;* where the contrary was the case, it would be an *open seed felling.* When the crop of seedlings was fairly complete, the young plants having reached a certain age, they would require more light. This would be effected by one or more *secondary fellings.* A *final felling*, to remove the reserves left after the secondary fellings, would be made when the seedlings covered the soil and had reached the thicket stage, and there was no longer any danger to fear by their being left uncovered. During the interval between the first and final fellings, the young seedlings would have to be carefully fostered by *cleanings.* These would be made principally with the object of removing the fast growing, but valueless species, which nearly always invade the ground and threaten the existence of the more valuable kinds. These cleanings would be followed by *thinnings*, which would be continued until the crop was almost mature. In the blocks of medium-aged crops not yet under regeneration, thinnings would also be carried out accompanied, in some cases, by selection fellings, where, as often happens, overmature trees were scattered through the crop. These thinnings would be made with a view to preparing the crop for regeneration, when the period for this arrived. Thus, in the block to be regenerated in the following period, only dead and decaying trees would be removed, while in those blocks, which were not to be regenerated for a considerable time, all

trees over a certain size or age, up to the limits of the capability of the forest, might be felled.

The above is an outline of the manner in which the method of successive fellings is organized, when applied to a forest in which crops of all the different age-classes exist in the requisite proportions. It rarely happens, even in Europe, where the forests contain distinct age-classes, that the method can be directly applied without some deviation from the strict principles of the rules for its application. Generally speaking, in order to form the periodic blocks of compact shape and fairly equal area, it is necessary to include crops in them, which have to be regenerated *out of their turn* so to speak. An example of this is here given, but it is hardly necessary to say that the variations, which circumstances may render necessary in applying the method, are endless.

Example of the general working scheme for a forest of 1,786 acres, treated as high forest by the method of successive fellings and thinnings under a rotation of 150 years divided into five periods of 30 years each.

Area to be taken in hand.			Area.	Period in which to be regenerated.	Remarks.
No.	Names of blocks.	Compartments included in each.	Acres.		
I	Deota	A 1	54	1880–1909	The compartment C 1 has already been regenerated, and contains only young seedling growth.
		B 1	87		
		C 1	214		
II	Chansil	A 2	176	1910–1939	
		B 2	140		
	Noranu	C 2	105		
		D 2	33		
III	Datmir	A 3	158	1940–1969	
		B 3	117		
		C 3	80		
IV	Bamen	A 4	189	1970–1999	
		B 4	68		
		C 4	100		
V	Sahira	A 5	205	2000–2029	The compartment C 5, although it is necessary to place it in the fifth block, contains mature high forest, which it will be necessary to regenerate in the first period, and exploit it a second time in the fifth period.
		B 5	112		
		C 5	44		

Working scheme for the first period of 30 years, 1880 to 1909.

Area to be taken in hand.			Ages of the crops in 1880.	Nature of fellings to be made.	Remarks.
Periodic blocks.	Compartments.	Areas.			
		I—Fellings by Volume.			
I	A 1 . . .	54	140	Regeneration fellings by volume 35,893 c ft. a year during the first ten years until the first revision of the possibility.	The fellings by volume comprise seed or preparation fellings, secondary and final fellings. The actual volume of wood in compartments to be subjected to these fellings is 828,300 c. ft., adding the estimated growth during 15 years (one-half or the mean year of the period as some fellings will be made at the beginning and some at the end of the period) at the rate of 2 per cent. a year, or 248,490 c. ft., the total volume is 1,076,790 c. ft. Therefore during each year of the period there may be felled $\frac{1,076,790}{30}$ = 35,893 c. ft. This estimate of the possibility will be verified at the end of ten years.
	B 1 . . .	87	130		
V	C 5 . . .	44	150		
		185			
		II—Area fellings.			
II	A 2 . . .	176	125	Final thinnings by one-fifteenth of the area '24 acres a year) repeated twice during the period in each area.	
	B 2 . . .	49	110		
	C 2 . . .	105	85		
	D 2 . . .	33	90		
		363			
III	A 3 . . .	153	80	Thinnings by one-tenth of the area (71 areas a year) repeated three times in each area during the period.	
	B 3 . . .	117	75		
	C 3 . . .	80	70		
	A 4 . . .	189	50		
	B 4 . . .	68	65		
	C 4 . . .	100	40		
		707			
V	A 5 . . .	205	6	Cleanings according to cultural requirements.	
	B 5 . . .	112	15		
I	C 1 . . .	214	16		
		531			

The fellings.—The fellings in this method are prescribed for one period only. The length of this period, which is a sub-multiple of the exploitable age, should be long enough for the seedlings of the principal species to establish themselves completely, that is to say, the interval that must be allowed to elapse between the preparatory and final fellings.

Except in the modified method explained below, the area to be taken in hand each year or sub-period is not prescribed for the *principal fellings.* These are, it will be seen, prescribed by volume and may be made wherever required, in any part of the periodic block to be regenerated during the first period. Selection fellings and thinnings are prescribed by area in the usual manner.

The order to be followed and the nature of the fellings to be made require no further explanations.

Modifications of the mixed method.—Several modifications have been recently introduced into the application of the method of successive fellings in France The principal of these consists in the establishment from the first of *annual coupes*, instead of leaving these to be fixed from year to year by the controlling officers according to cultural requirements. The whole forest area is divided off into as many *permanent annual coupes* as there are years in the exploitable age. These coupes are made fairly equi-productive by deduction of blanks and the assessment of the fertility of the great natural divisions of the forest, in the manner already explained for coppice. The coupes being formed, the preparatory or seed fellings are then prescribed by *area*, one of the coupes being taken in hand each year for this purpose. The same system is followed with regard to the thinnings and cleanings, which are made by area in regular succession in one of the annual coupes. But this system has to be somewhat departed from as regards the secondary and final fellings, which depend on the state of reproduction and the development of the seedling crops. These fellings have to be made by volume as in the old method, and for this purpose the coupes in the block under regeneration are grouped together, and the volume to be felled each year in this block is then calculated in the manner already explained.

Application of the method to irregular crops.—None of our Indian forests could be subjected directly, in their present condition, to the method of successive fellings, as they do not as yet contain definite groups of age-classes. Should it be decided to apply the method to any of these forests, it will, therefore, first be necessary to *transform* the crop into one of the type that is required, that is to say, containing a regular series of age-classes. For this purpose, the first thing to be done is to lay down the general frame-work of the plan according to the method of successive fellings which it is hoped eventually to apply to the forest. That is to say, the general working scheme would have to be framed, and the circles and periodic blocks or coupes corresponding to this frame-work laid out. Until this is done, and the place which each portion of the forest will occupy in the final scheme is known, the cultural rules to be applied to such portion cannot be laid down. The general working scheme gives the order in which the various portions of the working circle are to be taken up for transformation during each successive period of the rotation.

The formation of the working circles is not a matter of difficulty as no gradation of ages will have to be sought. The length of the provisional rotation during which the forest would be transformed would be the same as the ordinary rotation, and would be determined in the same way, that is to say, it would depend on the size of the exploitable trees and the rates of growth. The periodic blocks would consist of a few great natural divisions of the forest, chosen so as to furnish more or less equal material during corresponding equal periods of the rotation. Indeed, the general scheme is generally very obvious and well defined. When the general scheme has been thus drawn up, two classes of operations will be required, namely, (1) *transformation fellings* in those portions of the forest which are to be first regenerated, and (2) *modified selection fellings* in the other portions.

The transformation fellings do not, as a rule, differ very materially, at least in principle, from ordinary successive regeneration fellings, but will depend more on the nature of the crop, and it will be necessary to change the manner of applying them from place to place according to the irregularities met with. Where reproduction was abundant, they would simply remove the mature trees in whatever way was required, so as to leave room to the young growth to develop. Where there was no young growth already established, it would be sought to obtain reproduction in the ordinary way by successive, preparatory or seed, secondary and final fellings. The selection fellings to be carried out in the blocks to be regenerated later on offer no difficulty. The trees to be removed would be such as could not maintain themselves in a sound state until the crop in which they were growing reached its turn for regeneration. Knowing the length of the rotation and the rates of growth, this would be a mere matter of figures. Thus, where the exploitable size of the trees was 24 inches in diameter, and with a rotation of 120 years, and a rate of growth of 10 rings per inch of radius, all trees above 12 inches in diameter might be felled in blocks or coupes in which regeneration fellings would not be made for the next 60 years, while in those blocks which would come under regeneration in, say 30 years, only absolutely unsound trees, or at any rate trees well over 18 inches in diameter, would be felled. As regards other points, the selection fellings would be arranged as in ordinary selection-worked forests regulated by the cultural method by area.

The transformation fellings would be made by volume in the manner already explained. The selection fellings would, on the contrary, be made by area according to cultural rules, with or without a limit to the number of trees to be felled, as was most convenient. The general working scheme would be drawn up in absolutely the same way as has already been explained.

The Group Method.

General description.—This is merely a modification of the method of successive fellings. All the calculations connected with it and the manner of prescribing the possibility, &c., are identical in the two methods, and the gradual exposure of the young seedlings is by means of two or three successive regeneration fellings at long intervals. These successive fellings are made, however, in the group method in one operation, so to speak, that is to say, a patch of seedlings, already established, is exposed at once to the climatic influences without any shelter. The method is nothing more than this. The volume of material that can be felled annually on the block under regeneration having been determined, this volume is felled by patches or groups wherever a group of seedlings is found to be established. The cleared patch is then enlarged, or new patches cleared from time to time as the area covered with established seedlings extends. The method is applied in exactly the same way as the *method* of successive fellings, and is accompanied by similar clearings, thinnings, and selection fellings.

Pastoral Treatment.

Areas to which applicable.—There are many tree-clad areas under the control of the Forest Department in India which can only be profitably exploited by means of pasture, and which it is in the interests of the community should be devoted to the production of fodder for cattle. Such areas require, however, to be placed under forest treatment with a view to preservation of the trees growing on them as these, owing to the greater depth to which their roots penetrate in the soil, maintain their freshness during seasons of drought long after the more shallow-rooted grasses have withered, and many grasses which do not exist in the open appear beneath their shelter.

As an example of a case in which the pastoral method may have to be organized, we may point to those tracts in some of the drier parts of India where the land, except in the beds of the rivers, is unculturable away from irrigation canals. The rainfall is quite insufficient, and the water lies too far from the surface for any system of well irrigation to be profitable. Cultivation is, therefore, confined to the beds of the rivers, but even there gives a poor return. Large populations frequently manage, however, to subsist in these areas owing to the addition to their income and food-supply which they derive from their herds and flocks which obtain their food from the trees and bushes which are dotted about in the uninhabited and unculturable tracts away from the rivers, and which even in years of drought, owing to the depth to which their roots penetrate in the soil, yield some leaves which can be used as fodder. In such cases as these, the grazing lands are the very life of the people, but should the trees on them disappear they would become absolutely barren. It is, therefore, necessary in the interests of the people to subject the lands to forest management, and to restrict grazing so far as may be necessary to prevent destruction of the trees It should not be sought, however, to produce timber on them, except such as may be yielded in addition to the fodder or by some method of treatment that will not interfere with grazing. These lands in many cases only produce some two or three cubic feet of wood a year worth not half as many annas. The fees derived from grazing, if the number of cattle were limited to what the lands could support, might well bring in as much. If, in addition to these fees, the number of people the grazing supports, as compared with the number benefited by the wood culture, is taken into account, the result in favour of pastoral treatment is out of all comparison greater than in the case of wood felling.

Application of method.—The treatment of forest grazing areas has been insufficiently studied in view of the enormous importance of such areas in the economy of the country. It may be accepted that the greatest quantity of fodder will be obtained by absolutely closing the area to grazing and to allow only grass cutting. For it is indisputable that animals in grazing trample and destroy more grass than they eat, damage the young seedlings and trees, and harden the soil. But this method of treatment is not often feasible, owing to the distance to which the fodder would have to be carried and the miserably small value of the animals to be nourished. There are many areas which it would be impossible to exploit except by cattle grazing. In such cases, it will generally be possible to limit the injury done to the trees, sufficiently to ensure their reproduction and perpetual maintenance, either by—

(1) limiting the number, or the kinds and classes, of animals grazed,

(2) limiting the period during which grazing is allowed.

The first method where it can be carried out is the best, the best not alone in the interests of the growth, but of the animals, which are thereby well nourished. But it requires, comparatively speaking, a larger and better supervised establishment to ensure the limitation being carried out in this way than by the second method, and the small fees usually realised for grazing will rarely cover such expenditure. In practice, therefore, the latter method, although much less effective, is the best. Where possible, both methods may be enforced simultaneously.

It may be remarked in this connection that one of the chief causes of the inferiority of most of the Indian cattle is the smallness of the fees charged for grazing, and the loose way in which these fees are often exacted. The Indian cattle-owner does not limit the number of his stock according to the grazing area at his disposal. He lets nature perform this office and keeps as many starving animals as can manage to escape dying. This would not be the case were the fees charged sufficiently high and the number of animals allowed to graze per acre strictly limited. It is a common practice for Government to sell the grazing right by auction or rent it to a contractor on the condition that the fees charged are limited to a certain maximum. The contractor's interest it then is to get as many animals as possible to graze on his land. The appalling number of cattle which are killed off every dry year in the drier parts of India has led to many proposals for increasing the grazing areas, and to the throwing open of the Government forests to grazing. Such measures merely tend to increase the number of miserable animals which exist without profit to their owners—nay to their detriment, because they consume what might have gone to nourish better animals—until the next season of drought kills them off. The only remedy lies in limiting the intensity of the grazing in the Government estates to what the land can support, and in charging such fees as will make it worth the while of owners to keep only animals that can bring them in a profit.

Although the areas subjected to the pastoral method of treatment should be worked with a view to the production of fodder, it by no means follows that none of the wood produced can be utilized. A supply of small timber as well as fodder can be obtained from the trees by subjecting them to branch-coppice fellings for instance, or, where the number of cattle is limited, over-mature trees can be removed by the selection method. It should, however, not be overlooked that the treatment is not to produce wood but fodder, and that, if restrictions are introduced with the object of preserving the trees, it is because these trees are chiefly useful for the fodder they furnish, either directly or by the shelter they afford,

and not for the wood they yield. In most cases it will be found that the direct profit from the grazing is greater than would be obtained from the wood under the strictest system of closure.

Supplementary Provisions of a Working Scheme.

Subjects to be dealt with.—The application of the method of treatment adopted in a circle may also involve thinnings or clearings being carried out, or even selection or other fellings being carried on in other parts of the circle; blanks or other areas being restocked artificially or valuable species being introduced into the crop. It will also generally be necessary to regulate grazing and the removal of produce by right-holders or of dead and fallen wood, and, as a rule, certain general improvements, such as the construction of roads or buildings, fire defences, &c., will require to be carried out.

Improvement fellings.—These, if any are to be made, will have been indicated with the method of treatment. In all cases they will be prescribed by area.

Sowings and plantings.—The importance which these play in the mode of working proposed will be indicated in the method of treatment on which the importance of the operation depends, as regeneration may be entirely obtained by artificial restocking, or the operations may merely include the re-felling of a few unimportant blanks. The introduction of superior species into a crop will generally be carried out by plantings.

Regulation of grazing.—Grazing in forests in areas which have been *permanently set aside for the production of wood* should not be confused with the pastoral method of treatment already described. The two classes of lands are absolutely distinct in the purpose for which managed. It may be assumed that, as regards the former areas, it is in the interests of the community at large, if not of the population immediately surrounding the forests, that they should produce timber, large or small. It may not be necessary or expedient to exclude grazing altogether from such areas, but there should be no room for doubt as to which, grazing or the production of wood, is to give way.

Many of the troubles of the Forest Department are due to a proper distinction not being made between lands which, in the interests of the

country, should be managed with a view to the production of wood and those which should be devoted to the production of fodder. Local Governments hesitate to place lands under forest control and management, because experience has shown that they are liable to be turned into close preserves for the production of timber, often when it is already too abundant for local consumption, and the people's grazing interfered with. The confusion between the two classes of areas has not infrequently ended in an unhappy compromise under which neither one class nor the other can be properly managed. For it is as unwise to unnecessarily restrict grazing in fodder reserves as it is to admit unrestricted grazing into forests. In preparing a Working-Plan the two areas would necessarily be separated, but unfortunately in the meantime many of the forests have been burdened with permanent rights of grazing which seriously interfere with their utility and which would never have been imposed on them by the civil officers had a wiser and more enlightened policy been generally followed with regard to the recognition of the natural grazing grounds.

Forest grazing, whatever may be the circumstances which render it necessary to admit cattle into the forest, must, when it cannot be stopped, be regulated and organized in any Working-Plan that is prepared for the area burdened with it. It is, therefore, necessary to consider the restrictions that may have to be imposed and how they should be regulated. In the first place, the grazing should—so far as this is possible in view of admitted rights and, in some cases, local customs as strong as rights—be subjected to, as far as this can be done, the following restrictions:—

(1) A distinction should be made between the grazing of sheep and goats and of cattle and horses or donkeys, which do much less harm, and goats and sheep should not be allowed into any forest placed under regular forest treatment.

(2) No herd or flock should be permitted to be grazed unless placed in the charge of a shepherd, who would be responsible for any infringement of the grazing regulations and for any injury done by the animals in his charge.

(3) All portions of the forest under reproduction, or containing very young growth, should be entirely closed to grazing.

(4) In the lower hills, the upper strip of forest bordering on the pasture land should in most cases be closed to all grazing.

(5) The number of animals allowed to graze should be proportionate to the area available.

(6) No animal should be allowed into the forest before the season at which the young crop of grass for the year appears.

As regards the exclusion of goats and sheep, it is not meant by this that these animals must necessarily be excluded from all wooded areas. This is not always possible or advisable; what is meant is that wooded areas in which these animals are allowed to graze cannot be subjected to any regular method of forest treatment. Any money spent on works of forest improvement in such areas will generally be useless and wasted, and the best thing is to abandon the area in question as 'forest.

Trees are not safe against injury by cattle until they have attained a sufficiently considerable size for their young shoots to be out of their reach. Even then damage, especially as regards reproduction, is caused by the trampling of the ground. So not alone should areas which have been felled, but those which are about to be felled, be generally closed to grazing in order to enable the soil to regain the condition suitable for the reception of seed. It thus follows that it is only in forests which are exploited at a considerable age that grazing to any great extent is possible. Coppice exploited at a low age can at the best be only opened for a very few years. Forests worked by the selection method ought, strictly speaking, to be always closed as reproduction is going on all over the area. Where this is not possible, means must be taken in some cases to exclude grazing from certain areas or, by means of loppings of branches and thorns; from near large trees which are about to be felled. Closing portions of a forest against grazing can only be effectively carried out if that portion has good natural boundaries, such as streams or deep ravines, &c. Hence the importance, for one reason, of closing as blocks *natural* subdivisions of a forest. Blanks requiring to be restocked are often a serious cause of difficulty in areas open to grazing. These cannot be restocked if grazing, which has often caused the blanks, be not excluded. It will often be necessary in a Working-Plan to make arrangements for fencing in such areas, or even fencing off temporarily those portions of a forest which are open from those which are closed.

It should not be overlooked that these restrictive measures should be introduced gradually. Their introduction is a question of time and *tact*. But the drier and hotter the climate, the greater the severity necessary.

In addition to these measures, efforts should be made to develop the value of the forest produce by means of roads. People respect property of real value. It has been said that the chief reason why the forests in the mountains of Auvergne and the Alps were destroyed by excessive grazing was because the wood was without value in such out-of-the-way places, while forests round Paris have been preserved because there was always a good market for their products.

It may not be out of place here to indicate briefly the legal restrictions placed in European countries in which the subject of grazing has occupied attention since the earliest times. Taking France as an example, the regulations regarding grazing contained in the Forest Code of 1827 date from the most distant times. In 1541, Francis I. revived the decrees on this subject, which were then in existence, and these were again sanctioned in 1660 in the celebrated Forest Ordinance by Colbert. The existing Forest Regulation on the subject is merely a repetition of these ancient laws. The principal measure contained in the old laws consisted in the power to close to all grazing for a definite period certain portions of a forest which appeared to require it, or even the entire area, if this appeared necessary for the safety of the forest. Under the existing law, instead of *closing* certain specified areas, the areas *open to grazing*, in which the right-holders are to be allowed to graze, are fixed each year by the Forest Officers (Articles 67 and 69), as also are the roads and paths (Article 71) by which the animals grazed are to be allowed to pass through the closed portion of the forest on their way to the open portions, the number and kind of animals which the right-holders are to be permitted to graze, and the time during which they can be grazed. *The introduction of goats is absolutely prohibited* (*non-obstant tous titres ou possessions contraires*—Article 78). The same restriction is placed on sheep; but, in cases where there are no other means of providing for their support, the Chief of the State may permit the cultivators living on the borders of the forest to graze their animals in the portions of the forest open to grazing.

As regards animals other than sheep and goats, the Forest Officers fix the number that may be grazed each year, and the period during which they may be grazed. This number is necessarily proportionate to the area thrown open (Articles 65, 66, and 68). Right-holders are only allowed to graze animals required for their *bonâ fide* domestic purposes. They are not allowed to graze animals for trade or speculation (Article 70). In order that the Forest Guards and Inspectors may be able to recognise them, all animals entitled to graze in the forests are branded (Articles 73 and 74). The animals belonging to one commune or group of right-holders are all grazed together under one shepherd (Article 72) appointed for that purpose. In this the modern law has followed ancient regulations, as it was found that with a number of animals scattered through the forest supervision became impossible. Separate groups of right-holders are not, however, allowed to unite their flocks under one shepherd, as too great a number of animals together injure the soil.

The shepherds appointed are directly responsible for breaches of the regulations or injuries done by the animals in their charge, and, if fined, the commune appointing them are responsible for the payment of the fines (former Article 72).

It is provided by Article 119 of the general rules made under the Act that every year the local Forest Officers shall establish by a *procès-verbal*, having due regard to the nature, age, and situation of the trees, the condition of the blocks of forest under the *regime forestier*, which can be made over for grazing; they are to indicate the number of animals that can be admitted to them, and the dates on which the exercise of the rights of user may commence and must end. The proposals of the Forest Officers are to be submitted for the approval of the Conservator before the 1st February in each year.

There are very severe penalties for a breach of any of these grazing rules. Right-holders introducing goats or sheep are subjected to a double fine. Right-holders who introduce more animals than they are entitled to, or who graze on closed portions of the forest, are treated as if they had no rights and subjected to the same penalties as if they were outsiders.

Regulation of rights in wood.—Where there is merely a right to a certain *quantity* of produce from any part of a forest there is no difficulty, as this produce would come from the prescribed fellings for the year in whatever coupe these were made. But it rarely happens in India that the right is in this form, but is a servitude on a comparatively small area. In such cases, the produce delivered to the right-holders must either be deducted from the available crop in calculating the possible yield, or the area burdened with the right must be formed into a separate circle to be worked solely with a view to furnishing the produce required.

A village has a right to 50 standing trees of a certain size and kind every year in one block only of a forest which it is wished to work, we will suppose, by the selection method. The annual possibility of the forest, including the trees to be given to the right holders, is calculated, we will assume, at 500 trees a year. Therefore in determining the size of the annual coupes, the coupe containing the area burdened with the right should be capable of furnishing the 450 trees once during the felling rotation, *plus* the 50 trees each year. That is to say, if the felling rotation was 10 years, the coupe bound to furnish the 50 trees a year ought to be capable of furnishing every 10 years 500 + 4,500 trees or 5,000 trees, as compared with 4,500 furnished by other coupes.

Another way of providing for the right would be to set aside an area capable of furnishing 50 trees a year. This area would be excluded from the working circle and formed into a separate circle. This would, however, be impossible, as a rule, in the hills, where each small scattered forest has to furnish a few standing trees each year for the repairs of neighbouring hamlets.

In such cases, the regulation may be best accomplished by sacrificing equality of yield and deducting the number of trees felled for the right-holders in a given area from the number to be felled in that area when its turn for exploitation comes round. Thus, suppose ten small scattered forests in the hills formed into fifteen annual coupes and worked by the selection method, the yield having been calculated at 500 trees a year. We will suppose that the villagers in neighbouring hamlets have rights of the forests to, say, 10, 20, 30 standing trees respectively. Suppose that the prescribed fellings reach the forest No. 1 in the third year of the felling rotation, 30 trees will have been felled, so that instead of felling 500 trees in this coupe only 500—30 or 470 trees should be felled. Similarly, the felling reaches forest No. 2 after 10 years of the rotation have elapsed. By that time 200 trees will have been felled in this coupe, so that only 500—200 or 300 trees should be felled. In the same way in forest No. 3, assuming that it is felled last in the fifteenth year, after 450 trees have been removed only 50 trees would be felled. A new calculation based on a fresh enumeration would of course be made at the commencement of the next felling rotation, and the trees to be deducted would count from this date. Where the right-holders' produce was removed from areas subjected to selection fellings by cultural rule, the matter would be very simple, as in such a case the state of the crop from a cultural point of view would determine the severity and nature of the felling undertaken, which would consequently be made proportionately light or heavy according to the quality of the material removed by the right-holders.

Extraction of dead or fallen trees.—As a rule, especially where it has been possible to choose a short-felling rotation, the dead and fallen timber may be left until removed with the ordinary exploitations in turn of each coupe. When the extraction can be effected more economically than by means of special exploitations where the fellings are prescribed by number of trees or by volume of material, the produce so extracted should of course go to form the total which is allowed to be felled. But where the local demand for produce is good, it may be advisable to allow the dead and fallen wood to be extracted annually or periodically. In this case, if the material to be removed by the fellings is prescribed, the trees extracted may, in some few cases of exact working-plans, be deducted from the permissible fellings, in the same way as already explained with regard to trees felled by right-holders.

Works of improvement (other than cultural).—A Working-Plan would be very incomplete if advantage was not taken of the study of the forest which it involves to ascertain and indicate the works of improvement, other than cultural ones, which are required. Very often the application of the plan

necessitates the opening out of new roads for the extraction of the produce, or the improvement of existing tracks, the construction of forest rest-houses; while the improvement of the boundaries, the better protection of the forest from fire or other injuries, the strengthening or re-distribution of the protective staff, may all require attention.

Such works should be indicated with whatever amount of detail may be required. They should not be vaguely suggested as has been the case in so many of our Working-Plans. If new roads or new fire traces are required, their position should as a rule be shown on the map and a rough estimate of their cost prepared in order to gauge the financial result of the whole working under the plan proposed. Very often it will be advisable to mark out the new roads or paths proposed and to make use of these in laying out the coupes on the ground. These coupes we have seen ought to be so disposed with regard to these roads that their produce can be readily and economically extracted by them, and the only way to ensure that the coupes will be adhered to and the roads laid out in the manner required, is to trace these out as foot-paths.

It may be useful to remark, with regard to works of this sort, that separate sanction will be required for the funds necessary for their construction as the time for this arrives. Although necessarily included in the plan, the sanction to this does not involve sanction, in the Code meaning of the term, to the proposed works. Another point, which will also be dealt with in treating of the control of plans, is that the works are only indicated and need not be made part of the permanent plan, which cannot ordinarily be departed from.

Forecast of financial results of working.—The Working-Plan should contain a rough estimate of the revenue and the expenditure under the proposed working as compared with the past. In all cases an attempt should be made to estimate the cost of proposed works of improvement.

When the areas to be felled have been decided upon, it will generally be necessary to make a forecast of the outturn of trees, or of material to be removed, so as to estimate the financial results of the proposed scheme of working. This estimate may be based either on an enumeration of the mature trees in the forest, on the previous outturn, or on experimental area fellings, &c. This enumeration should not, however, be mistaken for a *calculation* of the possibility, such as is made when fellings by volume of material or number of trees are prescribed

CHAPTER IV.

COMPILATION OF THE WORKING-PLAN REPORT.

General remarks.—It is desirable, especially in India, where frequent changes in the forest staff are unavoidable, that working-plan reports should be prepared according to a stereotyped pattern. Uniformity not alone lessens the labour of mastering the contents of different plans, but, without it, systematic scrutiny of the plans prepared is well nigh impossible. The fact that each report has to deal with essentially different local conditions is no impediment to the grouping together, under suitable headings, of the various classes of subjects which have to be dealt with, or to discussing these in logical sequence.

The order to be followed in treating the various subjects dealt with in working-plans is indicated in the following pages and it is only necessary to add that each report, while containing sufficient information to enable the soundness of its provisions to be tested and the ideas of its compiler to be followed, should be as brief and as simply written as possible. Lengthy descriptions and discussions of sylvicultural questions, mathematical calculations and complicated tables of statistics should, as far as possible, be avoided. The information to be deduced from statistical tables can generally be explained verbally in a few words, and the application of mathematical formulæ to the data available in connection with Indian forests is liable to lead to erroneous results. Many plans now lying in Forest Offices have never been applied, owing to the neglect of such rules. These monuments of misdirected energy represent, however, a large amount of labour, and, it must be added, a very considerable amount of expense, all of which has been wasted.

Arrangement of the subjects.—A Working-Plan is a *forest regulation or prescription deduced from facts*, and in order that the prescriptions may be intelligible it is necessary that the manner in which they have been arrived at should be explained, and the facts from which they have been deduced stated. The working-plan report, therefore, naturally forms two parts, the first containing a summary of the facts on which the proposals are based, and the second a statement of these proposals, accompanied by whatever explanations are necessary in order to show how they have been arrived at. The nature of the subjects to be dealt with in each of these

parts and the order in which they may, as a rule, be conveniently arranged, are as follows :—

INTRODUCTION.

PART I.

Summary of Facts on which the proposals are based.

General conditions of the tract dealt with.

Name and situation.
Configuration of the ground.
Soil.
Climate.
Agricultural customs affecting the proposals.
Distribution and area of the forests.
State of the boundaries.
Legal position.
Rights and concessions.

Description of the forest growth.

Composition and condition of the crops.
Injuries to which liable.

System of Management.

Past and present systems of management.
Special works of improvement undertaken.
Past revenue and expenditure.

Utilization of the Produce.

Marketable products; requirements to be met.
Lines of export.
Markets.
Mode of extraction and its cost.
Net price of each class of saleable produce.

Miscellaneous facts.

The forest staff.
Labour supply.

PART II.

Future Management discussed and prescribed.

Basis of Proposals.

Working circles, how composed ; reasons for their formation.
Compartments ; justification of the subdivision adopted.
Analysis of the crop ; method of valuation employed.

Method of Treatment.

Object sought to be attained.
Method of treatment adopted.
The exploitable age.

The Fellings.

General scheme of working.
The possibility; how calculated.
Period for which the fellings are prescribed.
Areas to be felled annually or periodically.
Conduct of the fellings; rules regarding these.
Tabular statement of fellings to be made.

Supplementary Provisions.

Cleanings; thinnings or other improvement fellings.
Regulation of rights and concessions.
Sowings or plantings.
Roads, buildings and other works.

Miscellaneous.

Miscellaneous prescriptions.
The forest staff; changes to be made in it.
Forecast of financial results of proposed working.

Appendices.

Maps.
Description of the crop in each subdivision; written or graphic.
Record of valuation surveys.
Record of observations of rates of growth.
Miscellaneous statements.

Introduction.—This should explain, briefly, the time occupied in the preparation of the plan, the establishment employed on it, its cost, any special difficulties connected with its preparation, and any other facts which merit being permanently recorded but which do not find a place in the body of the report.

Example.—The field work, which included the survey of the forest to be exploited under the present proposals, was commenced in the beginning of June 1884, and continued, with a short intermission during the rains, until December, when travelling in the hills became impracticable. It was recommenced in the following May, and brought to a close at the end of the same year, 1885.

The establishment employed during the first season, in addition to the Officer in charge and his office staff, consisted of two native sub-surveyors, lent from the Forest Survey Branch towards the end of the season, and a small staff of khalassies, recorders, tree measurers, and coolies. During the second season, two Forest Rangers were employed in addition to the temporary staff entertained during the previous year.

The total cost of the work, including the pay and allowances of the Officer in charge, the subordinate staff, and all other charges, amounted to R16,800, or to R156 per square mile for the area for which Working-Plans have been prepared. This high cost is partly due to the difficulty of the country in which the forests are situated and the consequent slowness of travelling, but it is also, in a great measure, due to the

employment of temporary subordinates, and the lateness of the season when work was commenced the first year.

Name and situation.—The name of the tract dealt with in the report, generally some forest charge, and the civil district or territory in which it is situated, together with the Forest Division to which it belongs, should be stated, and it should be explained whether the forest area comprises one or several separate forests. The vicinity of great towns or markets for the produce, or of rivers, roads, or railways leading to these places, should be mentioned where these exist.

Example.—These plans have been prepared for what are known as the "Naini Tal Forests" which comprise twenty separate areas situated in the Kumaun District in the *pattis* of Chakrata Pahar and Dhangakot within the jurisdiction of the Commissioner of Kumaun. These forests surround and supply with produce the Municipality and Cantonment of Naini Tal and constitute one of the two Ranges of the Naini Tal Forest Division.

Configuration of the ground.—It should be explained whether the forests are situated in hilly or level ground, or on a plateau; whether they form part of one or several river basins; at what height or heights above the sea they are found, and their relative position with regard to the surrounding country.

Example.—The forests are situated on comparatively low hills, forming a series of superimposed terraces or plateaux with sloping sides. The tops of these hills are flat; so that instead of ascending on to a ridge we ascend on to a plateau, and the action of time has not been able to destroy the original terrace formation which, standing like steps of stairs, give the hills their characteristic appearance. Precipices are, however, extremely uncommon, and the slopes are usually easy enough for a saddled horse to be led about almost everywhere. The hills rise from 1,000 to seldom more than 1,700 feet above the deepest valleys, and the difference of level in the case of many of the valleys is only 500 to 500 feet. The forests, as is to be expected, occupy the upper plateaux and slopes of the hills, cultivation having taken possession of the lower slopes. The main ridges form a continuous sinuous line, extending from south-west to north-east, forming the water-parting between the Pamgunge on the north and the Pahdi on the south, but the greater portion of the area lies within the drainage basin of the latter river.

Soil.—The general character of the geology of the country, the resulting soils and their relation to the composition of the forests, should be explained. The explanation should, however, be brief and general, as a more detailed description of the soils in each block is, when necessary, separately given.

Example.—The entire rock system belongs to what is known as the

Deccan traps, and is consequently volcanic. The soil resulting from the disintegration of these trap rocks is a red, ferruginous loam, fairly fertile where deep. This, however, is not the case on the level surfaces of the plateaux where disintegration is slow and where, in some cases, the unchanged rock protrudes at the surface; elsewhere the underlying rock being everywhere laminated, compensates to some extent for shallowness, but generally speaking, the soil is not favourable to tree growth, as it is too superficial and dry. On the slopes, however, which separate the various superimposed plateaux, and in the bottoms of the numerous gullies, the soil, formed of deep accumulations and resting on a sub-soil of loosely disintegrated trap, is well-drained and admirably suited to the growth of trees. An intrusion of granitic or gneissic rock, about three miles broad, crosses the area from south-east to north-west. The resulting soil is a fine micaceous sand, which of itself is usually unfertile for agriculture, requiring heavy manuring, but under broad-leaved forest it becomes fairly and even highly fertile.

Climate.—All that is generally required is a simple statement of the facts with most of which every cultivator in the locality is acquainted. Periods of drought or of excessive rain, of great heat or of cold, frosts, dangerous winds and similar facts which have a notable effect on the forest vegetation or on fire-protection, sowings or plantings, or other sylvicultural operations, should be briefly explained. A few remarks regarding the unhealthiness or the reverse of the climate may be usefully added when this affects the execution of work or the duties of the establishment.

Example.—The distinguishing characteristics of the climate are its dryness and the great divergences between the temperature at different seasons of the year. These great extremes and the dryness of the atmosphere during most of the year, render the cultivation of all but a few species of trees, such as *sissu*, impossible; even the hardy *kikar* is killed off by the frost unless artificially shaded in winter. The monsoon rains nominally commence in July, and continue to the end of August, but these rains are neither very constant nor regular and in some years almost fail altogether. Plantings and sowings are only possible during this short period and even then often fail in consequence of the dry hot season of September. As a rule, a large proportion of the annual rain falls during the winter, showers commencing at the end of December and lasting to the second week of January. March to May are more or less stormy as well as hot and dry. The dangerous season for fires is thus a very long one, but as a compensation the grass withers early, and can be burnt with certainty. Easterly winds prevail but are seldom violent and their effects can be neutralized, to a great extent, by protective bands of trees along the east boundary. The climate is, on the whole, healthy, even during the scorching dry heats, except in the deeper valleys and irrigated tracts. In these the contrast is very great. Owing to the dampness of these places the forests remain green throughout the year

and are so unhealthy that labourers cannot be induced to reside or work in them during the warm season from May to October.

The climate and soil together represent the *productive capacity* of the area or *locality* and determine the species and method of treatment best adapted to the results required. The character of the climate of a given locality depends on its *situation* and is described by stating the different local peculiarities of the atmosphere as regards temperature, degree of moisture, prevailing winds, &c.

The points to be noted in describing the climate of a given locality are, therefore:—

Geographical situation.

Height above sea-level.

Relative height and position with regard to the surrounding country.

Slope, aspect, and general *topographical features.*

These facts have, however, relatively small importance in the plains.

(5) *Temperature,* mean, average and at different seasons; seasons of greatest heat and cold and their duration.

Species which thrive in the locality, and their peculiarities as regards climate.

Usual *state of the atmosphere,* whether clear or the reverse, and its dryness or humidity at different seasons.

Rainfall, mean, annual and at different seasons and seasons of drought, their duration, seasons of snow-fall and its duration.

Winds and storms, their duration and force, damage done by them.

The facts should, however, be applied to the questions at issue and explained in a popular manner, not stated in their crude form.

Agricultural customs affecting the proposals.—In most instances the agricultural customs and the mode of life of the local population have an important bearing on the management of the forests in the locality, both with regard to the direct supply of the wants of the people in forest produce and the adoption of a system of management that will interfere the least possible with established customs. Such facts, where they influence forest management, should, therefore, be briefly stated.

Example.—The inhabitants are all cattle-farmers as well as cultivators, and necessarily so, as there are no canals in the district, and the water lies too deep from the surface to make well-irrigation profitable. Hence the cultivations are confined to the naturally irrigated areas near the rivers, where, however, owing to the irregularity of the floods, farming at best affords but a poor and precarious means of subsistence. The combined system of cattle-farming and tillage in vogue is, therefore, the only means by which the people can manage to make a living. Even in the driest years, when the bare lands near the villages contain no fodder at all, there are in the forests some grasses and the leaves of many trees which can be used as fodder, and in this way the villagers contrive to keep large herds of camels and cattle, and flocks of sheep and goats, from which they derive a considerable addition to their income and their food-supplies. It follows that while grazing must be provided, the number of animals pastured must be limited to what the trees and grass combined can furnish fodder for; without this the forests must inevitably disappear; the great increase in the stock kept by the villages threatens this already.

Distribution and area.—It is generally necessary, especially where the report deals with a number of scattered forests, to explain in a few words how these are *distributed.*

Example.—The forest area is formed of a large number of separate forests occupying the steeper slopes and least accessible portions of the higher hills, cultivation having taken possession of all culturable portions and the lower valleys. The number of demarcated forests in the valley is 80, and the average area of each is only about 900 acres. These small forests are found scattered over the whole area of the valley, in the basins of the tributaries of the Ravi and Siul, at elevations of between 5,500 and 8,500 feet above the sea-level.

The detail with which the *area* statement should be complied depends on the nature and degree of elaboration of the plans to be prepared. When possible, the size of the wooded, blank and unculturable portions of the forests, and the areas occupied by enclosures of private or other land not under forest management within the boundaries, should be stated *separately* for each block or subdivision. This information is required in laying out coupes, especially where the possibility is prescribed by area. Where, however, large areas are to be felled over by the selection method a less complete area statement suffices, but this would usually be supplemented by a more detailed description of the blocks showing the wooded, blank and unculturable area in each.

In addition to stating the area, it should also be explained how the forests have been surveyed, and with what degree of accuracy, what maps exist, and how the areas have been ascertained from these maps.

Example.—The area of the working circle can only be given approximately, as accurate maps are only available for the Deota forests.

Names of Forests.	Names of Blocks.	Area of each block in Acres.	Acres Total Area.	REMARKS.
Deota	Lambatach Deota Bamsu Saras Kotigad	2,883 2,937 2,323 1,234 1,105	10,485	The Deota and Chansil forests were surveyed in 1881-82 by the Forest Survey Branch, and the areas given are those furnished by that Branch and calculated from the maps on the scale of 4" to 1 mile that were prepared.
Chansil	Chansil Kotigad	1,805 3,968	5,773	
Sahtra . .	...	...	1,410	For the remaining forests, which were demarcated in 1885, only rough sketch maps on the scale of 2" to 1 mile exist, and the areas given will have to be corrected when the regular survey now in progress has been completed.
Noranu . .	...	...	1,520	
Nainwar . .	...	...	3,450	
Datmir . .	...	...	2,560	
		TOTAL .	25,198	

The following is an example of a more detailed statement. Very often, however, it will be necessary to give not alone the total *wooded* area, but also the area of each type of forest in each block. Where a stock map has been prepared this offers no difficulty :—

Names of Blocks.	Area.								Remarks.
	Wooded.	Blank.	Forest roads.	Forest buildings.	Other Forest lands.	Total under Forest Department.	Area not under Forest Department.	Total area within boundaries.	
Dhamin .	2,643·4	128·8	111·1	11·6	...	2,894·9	116·4*	3,011·3	* 13·2 acres occupied by public roads, 1·2 acres in corner of Compartment No. 1 by Canal buildings; 81·0 acres by lands adjoining the Canal. and 21 acres by the Railway.
Paimash .	1,699·3	68·0	83·0	5·3	16 0	1,871·6	59 0†	1,930·6	† 43·0 acres occupied by the Canal lands, and 21·0 by the Railway.
Kote . .	1,746·2	274·8	21·7	1 6	3 6	2,047 9	61·5‡	2,109·4	‡ 19·6 acres occupied by Canal bungalow and compound, and 23·0 acres by lands adjoining Canal.
Lurla .	2,310·2	91·1	138·0	...	...	2,539·3	101·0§	2,640·3	§ 101·0 acres lands adjoining Canal.
Total .	8,399·1	562·7	353 8	18·5	19 6	9,353·7	337·9	9,691·6	

Boundaries.—In order to justify any proposed works of improvement with regard to the demarcation, it is necessary to know whether the boundary marks used are sufficient and suitable or not, whether they are in good or bad condition, and whether they are well placed. In some cases a re-demarcation of parts of the boundaries may be required, and, if so, this should be justified. The nature of the surrounding properties, the likelihood of trespass, and such other points that have an important bearing on the nature of the boundary marks, their size, degree of proximity, &c., should be dealt with in such detail as may be necessary in each case. It should be understood that a "Register" of boundary marks is not required, and should not usually be given in a Working-Plan Report.

In many cases, as, for instance, where the annual clearing

of the boundary lines for fire-protection or other purposes is necessary it may be advisable to give the length of lines to be kept clear, or the number of marks to be repaired, &c.

The boundaries of private lands included in the forest should be described in the same way as the external boundaries.

Example.—The boundary marks used along all the outer boundaries are substantial and sufficient. The whole of the outer forest boundary is demarcated by pucka square masonry pillars 3′ × 3′ × 4′, whilst pillars, also square, measuring 2′ × 2′ × 2½′ have been built to mark off the boundary between the forests open and those closed to rights. There are in addition 318 round pillars 4½′ in girth by 2½′ high, demarcating the chaks or village lands within the forests. The shape of the boundaries is, however, very defective, arbitrary curves between two consecutive pillars being very common. The consequence is that it is extremely difficult to follow the boundary, and encroachments might pass unnoticed for years. In the reserve this drawback has been overcome by building a ring fence of rough posts, but there can be no question that something must be done as soon as possible to render the boundaries of the other forests easily and permanently recognisable; otherwise harassing disputes in the near future are inevitable. The adjoining estates consist of village lands, the cultivation of which not infrequently comes right up to the boundary.

In some cases it may be advisable to prefix the description of the boundaries by some remarks explanatory of the circumstances under which the demarcation was made

Enclosures within a reserve are often of such importance, as regards the management of the forest, that it may be necessary to notice these in detail, explaining their effect on that management.

Legal position of the forests.—In order fully to understand the present status of the forests, a brief account of the manner in which they were acquired, and how they are held by Government, and of their settlement, if there has been one made, should be given. The Act, if any, and section of the Act, under which the lands have been placed under forest management, with, for convenience of reference, the numbers and dates of Notifications, should also be given. Special rules or regulations affecting the forests, such as grazing rules for instance, should be mentioned and their bearing on the legal position of the forests explained. This section of the Report should not, however, be confused by details regarding the past management of the forests. These should be separately dealt with in another section.

Example.—Jaunsar originally formed part of the Sirmur or Nahan State. In 1815 it was conquered by the British, since which time it

has been under British rule, but it was not until 1860 that the right of Government to the ownership of all waste land was enforced by a rough limitation of the rights of each collection of village communities. It was clearly laid down in this settlement that the rights of the villagers in the forests consisted in grazing, in collecting dead wood for fuel, and in cutting timber for their own use only.

In 1865-66 the proposal to establish a military cantonment at Chakrata gave rise to the issue of different orders for the protection of the more valuable tracts of forest, and in 1868 a Forest Officer was appointed to take charge of them. In 1869 the demarcation of certain portions as Government forest was directed, and three classes of forests were formed :—

First class.—Forest areas which were practically free of rights.

Second class.—Forest areas under the control of Government, but subject to certain rights of usage.

Third class.—Forest or waste land, the use of which was allotted to the different khats, the right to sell produce only being prohibited.

In 1878, on the Indian Forest Act (VII of 1878) coming into force, a settlement, under Chapter II of that Act, was made of the first and second class forests, and such areas as could not be secured free of all rights whatever were excluded and classed with the third class, or as these are now called *Unclassed State Forests.* The settled forests, which it will be seen are free of all rights, were gazetted as "Reserves" under section 19 of the Forest Act (*vide* G. O. No. 408 A of 1st August 1880). The unclassed forests are not (*vide* G. O. No. 77 F. C. of the 13th June 1871) managed by the officers of the Forest Department, the enforcement of the limitation as to the sale of produce from them being left to the civil officers.

Rights.—It is generally necessary to explain the nature and extent of the rights with which the forests are burdened, so far as these affect the management and sylvicultural treatment of the forest. But it is only where definite proposals are made for commuting particular rights, or for providing for them in some special manner, that full details of each right have to be given and this should then form the subject of a separate report.

It should be clearly understood that the body of a working-plan report is not the place for a detailed *record-of-rights*, the keeping up of which is separately provided for in the Forest Code. As, however, it sometimes happens that the rights, although legally settled, have not been recorded in a convenient form, it may be advisable to take advantage of the occasion of the preparation of the working-plan to redraft, under Government sanction, this record in a more intelligible form for ready reference. If it is found desirable to publish this with the working-plan report, it should be given as an appendix.

Example.—The forests in this Division come under the action of the third clause of Section 34 of the Act and no settlement or enquiry having yet been made, the matter of the existence or non-existence of rights unfortunately still remains an open question. The following concessions have, however, been made by an administrative order in favour of the inhabitants of certain villages in the immediate vicinity of the forests, *viz.*:—

Sattikhala	10 trees	2 feet	diameter	a year.
Malan	20	"	"	"
Saldhang	35	"	"	"
Amgadi	26	"	"	"
Bedasin	63	"	"	"
Total . .	154	"	"	annually.

These rights are limited to the actual domestic and agricultural requirements of the villagers for whom they are recorded, and they cannot be exercised for purposes of sale. The maximum size for a house, for building and maintaining which timber can be claimd, is 40 (forty) feet × 36 (thirty-six) feet × 16 (sixteen) feet.

Any trees may be lopped for green leaves, except the protected kinds, but the lopping is limited to branches not exceeding 2″ in diameter.

The grazing allowed under the orders quoted is as follows :—

Tract affected by the concession.		Total head of cattle admitted to graze at half rates				Remarks.
Name of block	Acreage.	Buffaloes	Cows and bullocks.	Horses, ponies and donkeys	Sheep and goats.	
Malan .	2,136	38	485	...	.	The present full annual rates per head of each class of cattle are respectively 4, 2, 1 and ½ annas: hence the total money-value of the concessions at the present rates is R1,389-13-6 per annum.
Amgadi .	3,135	223	1,165	52	175	
Bedasin .	6,304	106	1,464	33	220	
Total .	11,575	367	3,114	85	395	

It is always well to make an estimate of the quantity of timber or fuel that will have to be provided for. This information is necessary in order to enable provision being made for the exercise of the rights and for their regulation which, it will be seen, may necessitate the areas affected being formed into separate working circles. The effects of the rights on the management of the forest should be noticed, and, where necessary, it should be pointed out where it would be

advantageous to commute rights, or in what way they should be regulated. Where possible, the value of the concessions granted should also be estimated.

Description of the forest growth.—As a detailed description of the crops in each block is usually separately given, or figured in the stock map, this section should contain only a broad general description, special attention being paid to points, such as the following, not dealt with in the detailed description :—

The different classes or types of forest; their distribution; principle and accessory species; their relative proportions.

The condition of the crop; density, absence or presence of blanks or glades.

Reproduction; the presence or absence of natural seedlings, and the causes of this.

Example.—Taking the forest as a whole, *the stock* may be generally described as consisting of three distinct zones which roughly occupy the following areas :—

(1) *The Karshu oak zone.*—Beginning at about 9,000 feet, and extending to the highest point of the basin. It comprises pure or mixed, open or dense, patches of the silver and spruce firs, and of *kharsu* (oak) interspersed with bird-cherries, maples, service trees, and yews. In this zone, wherever the ground is more or less flat, we obtain extremely rich pastures. Deodar just enters this zone.

(2) *The Deodar zone.*—From 9,000 feet to 6,000 feet. Deodar is spread throughout this zone. The tree does not, however, grow pure, being mixed with a larger or smaller proportion of spruce and *moru* principally, and silver fir exceptionally. It is most abundant, and generally constitutes the predominant tree, between 7,000 and 8,500 feet of elevation. Above and below this belt, deodar confines itself almost exclusively to ridges and well-drained slopes, particularly the former.

(3) *The Chir zone.*—From 6,000 feet to the lowest point of the circle (4,416 feet). The predominant type of forest is broad-leaved, consisting of *bán* (oak) and a few horse chestnuts, maples, &c, at the higher elevations, and chir with small trees and shrubs elsewhere. Numerous grazing grounds exist or recently existed in the *bán* area, which is therefore interspersed with comparatively extensive areas of open low scrub.

Thus, the area producing deodar, which is the one marketable tree, is about half the total area of the forest. The forests are all irregular, no distinct age-classes or gradation of ages existing, but every variation in *density* is to be met with, from open grassy blanks to dense mixed

deodár and fir forest. The following statement shows the areas occupied by each of these zones of growth :—

Description.	Wooded.	Blank.	Unproductive.	Total.
Kaishu zone . . .	2,795	1,024	2,108	5,927
Deodar zone . . .	7,855	1,603	1,002	10 450
Chir zone . . .	1,034	1,038	428	2,500

In the deodar zone reproduction is good, save where the cover is too dense, *deodar* seedlings as well as those of *kail* and rai being plentiful, and of *moru* where this tree is found, in the Palangi block especially. In those blocks which have been worked over, natural reproduction is exceedingly satisfactory.

With what degree of detail each of the principal species should be described depends on the special circumstances and must be left to the judgment of the working-plans officer, but, broadly speaking, with regard to important species of which the treatment is not well known and laid down, it will be useful to record whatever information can be collected on the following points :—

Characters of the soil and of the area in which found growing, and in which it thrives best.

Wants or peculiarities with regard to its reproduction, seeding, &c. ; aptitude to produce shoots or suckers.

Growth in girth and height, size attained, longevity.

Most suitable method of treatment, peculiarities as regards supporting shade or the reverse.

Products yielded and purposes for which they are employed ; qualities of its wood.

The origin of the crop, or important facts connected with its past treatment, throw considerable light on its present condition, and where these are known they should be explained. In the case of plantations, this is of course very easy, but in many other cases also much may be learned.

Example.—The large size of the few old trees still remaining would be sufficient to prove that a fine forest growth at one time covered at least the more favourably situated areas, if there was not a historic evidence that this growth has disappeared through *jhooming*. The fact is that the level tracts which typify these hills, attracted settlers at an early date after the pacification of the country under British rule, and although these *jhooms* did not extend far up the hill-sides, which are generally too steep for this mode of cultivation, the trees growing on them did not escape injury. The best kinds were exported to the plains, being generally felled four or five feet from the soil, and the shoots were hacked off in a similar

manner as soon as they attained a marketable size. The inferior species were lopped to provide fuel or fodder, while the entire area was overrun by herds of cattle and by fires. The evidences of this treatment are, it will be seen, very visible on the crop which now remains.

Injuries to which the crops are liable.—It is only necessary, as a rule, to explain those causes of injury, such as offences against the forest regulations, fires, grazing, climbers and other injurious growths, depredations by noxious animals, &c., which it is practically possible to take steps to mitigate or prevent, and which have an important direct bearing on the forest management. Purely scientific information with regard to fungoid growths or insect pests, however interesting or even useful, is generally out of place in a working-plan which aims at practical utility.

The causes of injury may be conveniently classed under two main heads, *viz.*, those due to natural causes, and injuries caused by man.

Example.—The chief preventible causes of injury are grazing and fires. Many other injurious customs formerly prevailed, such as tapping for resin, taking large strips of bark off the trunks of fir trees for roofing temporary huts and hacking green deodar and other conifers for fuel or torches, but these have been altogether put a stop to.

The bad condition of the forest as regards reproduction is very largely due to the very irregular manner in which grazing is allowed. The cattle graze all the year round at a few favoured spots near the villages. There are thus numerous congested grazing centres scattered throughout the forests, whilst there are also considerable areas where grazing is very slight, or almost *nil*. The closing and opening in regular rotation of different blocks, and the consequent distribution of the grazing over the entire area would, in a great measure, do away with this evil.

The chief cause of injury is, however, fire. With the exception of the protected blocks, only some damp, shady hollows covering an insignificant area, escape being burnt, and the general effect on vegetation is deplorable. The quality of the trees is inferior, a large percentage is hollow and saplings are often burnt down to the ground, so that the greater portion of the stock really comes from coppice shoots, while reproduction is almost entirely checked owing to the seeds and seedlings being destroyed. The density of the forest is also sensibly affected, the formation of large blanks is increasing and the spread of bamboos and grasses, such as bábar, has been encouraged rather than retarded by these fires. Considering that there is a certain demand for wood of all kinds in the Range, it is of course important to extend fire-protection over a larger area, and this could gradually be done without causing either hardship or discontent.

Climbers in the upper forests, unlike the maljan and others in the sâl areas, do little or no damage. The commonest of the climbers and creepers are *ivy*; vines, particularly *Vitis Himálayana*; *Schizandra grandiflora* and *Ficus scandens*. These perhaps do more good than harm

by keeping the trunk moist, and killing off the lower branches. No measures are, therefore, necessary with regard to them.

System of management.—The system or systems of management which have been followed in the past should be briefly discussed, with a view to preventing a repetition of past mistakes and so that the present condition of the crop and the system of management in force may be better understood. This may require some brief historical remarks, but these should not be allowed to develop into more than is sufficient to render the explanation comprehensible.

Example.—For the first three years of British rule, all forest dues were leased out to contractors with the transit dues on merchandise, and subsequently they were farmed out to the zemindars of the parganas in which they were collected. In 1844, in consequence of the difficulties regarding boundaries that had occurred, the collection of these dues was entrusted to the authorities of the district, but two years later the duty of collecting them was restored to the zamindars. In 1866 the reservation of the lands was recommended, and a proclamation was issued prohibiting the cutting of sâl within these areas and thus the system of Government protection commenced. Since that time the following systems of management have been attempted, with, it will be seen, varying results:—

Leasing out for one year definite areas for the extraction of produce.—This system saved the establishment much trouble, as the lessees issued their own passes and exercised their own check, and since they understood the demands of the local markets better than the forest officers, they probably paid Government a larger sum than would have been collected in detail by the Department, directly from petty purchasers. But the method led to collusion between the lessees and the subordinates set to watch them, and trees were killed standing, and even green timber was taken out. The system has now been abandoned.

Removal of produce under passes issued at revenue stations.—Generalised too far, this system leads to the very same defects that characterise the preceding one; but restricted to the removal, under passes valid for one, or, at the outside, two days, of small fallen wood, and of marked and girdle-killed trees fit only for fuel, the system is a very desirable adjunct to other and more wholesale methods of working.

Sale of standing trees, marked by the Forest Officer, by public auction or by private agreement.—This has been found by far the best system to adopt in disposing of large quantities of valuable produce, and should be generalised as far as circumstances will permit.

It will generally be necessary to state with some detail the system of management in force and to criticise

this system, pointing out any defects observed in it in justification of proposed changes.

Example.—Under the system of working in force—

Green standing trees may only be cut when marked with the previous sanction of the Divisional Officer. An exception to this rule is sometimes made in the case of inferior species.

Fallen green trees may only be removed under the pass and mark of Foresters in charge of Ranges or beats.

Bamboos may only be cut under permits for specified areas issued by Range officers.

Consumers of produce are allowed to enter the forests and to remove the produce they require on taking out a pass at any of the revenue stations and paying the dues on the produce according to a fixed tariff. This general rule is, however, subject to the following restrictions :—

That permission to work be taken out before the forest is entered, and that the forest rules be observed.

That cattle shall not be brought into the forests without first having paid the grazing dues, or remain in the forests save at authorized cattle-stations.

Although there can be no doubt that more timber and firewood are produced over the entire area than the quantity sold annually, it appears that, on the other hand, some of the more accessible parts have been overworked, whilst large but more inaccessible areas have remained untouched. The rules for working require to be revised so as to remedy this.

Special works of improvement.—In most cases there will be works of improvement or construction for the extraction of the produce; sowings or plantings, timber slides, roads or bridges, &c., to be described, and in some cases there may be special works, such as drainage or irrigation works, barriers created to prevent the erosion of the banks of streams, and so forth, that require explanation. Such descriptions may find a place in this section, the works being indicated with such detail as circumstances require.

In discussing the cultural or other works of improvement undertaken in past years attention should be drawn to any lessons to be derived from them; but should it be found necessary for the information of the local officers to describe these works in detail, this should be done in a special report, or in an appendix to the Working-Plan.

It has been ascertained from the records that *pla* [illegible] leodar, walnut and ash have uniformly succeeded, while *direct sowings* have as uniformly failed. Even in the nurseries the germinating seedlings have been saved with difficulty, but once over the first few months they have

given no trouble. The cost of planting out from the nurseries has on the average amounted to R10 per acre, or including nursery charges, to R18 per acre established.

Revenue and expenditure.—Where the figures are available, the average receipts and expenditure for the past few years in connection with the area dealt with, and, if possible, each class of forest in this area, should be given. If no separate accounts are available, an estimate should, if possible, be made. The *net* prices realized for the produce exclusive of all cost of extraction and of establishment employed in supervising timber works, should, as far as practicable, be given. This information should be discussed, use being made of the figures to justify any proposals made for increasing the expenditure under these headings.

Example.—From a statement showing the revenue and expenditure during the past ten years, compiled from the records kept in the Range Offices, it appears that the gross receipts have averaged during the past ten years R1,64,000 and the expenditure on timber works R44,000. The profits derived from the forests have averaged R1,20,000 annually and of this sum there has been expended—

On roads and buildings	2	per cent.
On cultural improvements	10	„
On establishments	21	„
Total expenditure	33	„

It is beyond dispute that this expenditure is far too low. The condition of the forests demands the expenditure of large sums annually on cultural improvements, while the low net price realized for the produce sold (only two annas per cubic foot on an average) shows that new lines of extraction are indispensable, in order to place the produce in the markets where it is wanted at a reasonable cost. An expenditure of at least 30 per cent of the profits might be devoted to improvements and 30 per cent. to establishments.

Marketable products.—It is necessary to know what products of the forest are saleable, the purposes for which they are used, and the quantities of each sort consumed by different classes of consumers or required to meet the public demand. In preparing the Plan a statement should, therefore, if possible be compiled from the office records, showing the quantities of produce exploited by Government agency, sold to purchasers direct, used departmentally, granted or sold to right-holders and given to free grantees.

Example.—The following statement shows the average quantities of produce exploited annually during the past five years :—

Description of Produce.	AVERAGE QUANTITIES OF PRODUCE REMOVED OR UTILIZED ANNUALLY.								REMARKS.
	BY GOVERNMENT AGENCY.		BY PURCHASERS.		BY FREE GRANTEES.		BY RIGHT-HOLDERS.		
	Quantity.	Value.	Quantity.	Value.	Quantity.	Value.	Quantity.	Value.	
	Cub. ft.	R	Cub. ft.	R	Cub. ft.	R	Cub. ft.	R	The material removed has been recorded in various ways, by trees, mds., &c. These have all been reduced to cubic feet by estimate.
Green sal timber	141,500	16,800	4,216,000	48,000	6,000	720	15,090	1,500	
„ sain „	69,000	9,020	200,000	24,000	...	...	...	...	
„ other woods	...	..	108,000	4,280	...	...	...	..	
Fuel . . .	20,000	625	180,000	23,200	...	...	20,000	2,400	
Bamboos . .	...	...	...	5,900	...	...	...	..	
Grazing . .	...	...	...	2,937	...	...	...	790	
Miscellaneous .	...	...	...	384	...	...	...	...	
Average 5 years 1885-86 to 1889-90 .	...	26,445	...	107,801	...	720	...	4,690	

Export lines.—The roads or main lines passing through the forests or in the vicinity, by which the produce is conveyed to the markets where it is consumed, should be mentioned, and the state of repair and adequacy of these roads for the purposes for which required should be discussed. Rivers and streams *used for the extraction of the produce* should be similarly described, and any necessary improvements in the waterways suggested.

Example.—The lines of export leading from the forests are the Sieul River, on which are situated the markets of Odeypur and Dharampur, and the main cart road leading to the city. In the Sieul itself at Bagti a narrow channel is so blocked up by a series of large boulders that it is a difficult task to float logs over the boulders from one end of the passage to the other. Blasting operations are required here.

The carting road is in the charge of the District Engineer, and its repairs are paid for from District funds.

The following roads, which are the main arteries of the range, have to be kept in good order so as to be passable for mules :—

Misan to Sagti	12 miles.
Dand to Sooli	6 „

New roads of the same sort are required in order to open out the Sain forest ; length from the forest to the cart road, 8 miles.

Ordinary fuel roads or timber-carrying paths, when no longer wanted for export purposes, need not, as a rule, be kept in repair, but they will not altogether disappear and can be restored when again required.

Markets.—The size and importance of each of the markets supplied by the forests under examination, their distance from the forest, and the produce consumed in each, should be discussed, with such detail as appears necessary.

Information should in most cases be given under the following headings:—

Name of Market.
Distance from the forest.
Line of export.
Description and quantity of produce consumed.
Sources from which supplied.
Quantities coming from Government forests.
Rates paid by dealers.

Mode of extraction and cost.—The manner in which the produce is extracted should be explained, and its cost estimated, and, where feasible, improvements suggested with the object of reducing the cost. The establishment of new roads and the improvement of existing lines (if previously proposed) of export can thus be justified in this section.

Example.—All the produce is conveyed to the market by the railway line to which it is conveyed from the forests, distance from 2 to 6 miles, by bullock cart. The rates charged by the Railway Company are given below. The cost of conveyance to the line by bullock cart amounts on an average to one anna per maund per mile of distance carried. This is the chief source of expense in the extraction of the produce and in a separate report it is proposed to substitute carriage by tramway for the present system by bullock cart. It is shown in this report that this will reduce the cost of extraction per mile of distance to half an anna per maund. The cost of constructing this new tramway, in accordance with the estimates given in the detailed report, has been included in the financial forecast.

Net price realized for the produce.—The treatment and exploitable age often hang on this calculation, which should show separately for each class of produce, according to the purposes for which used, the net amount realized after deducting all costs of felling and extraction, &c. An example of such a calculation has been given in Chapter II in discussing the exploitable age. The result arrived at may be stated in words or in the form of a statement, whichever is most convenient.

Example.—The following statement shows the gross and net prices realized on each class of produce sold:—

Description of produce sold.	Gross price per cubic foot (solid).	Net price per cubic foot (solid).	REMARKS.
	R	R	
Trees standing in Forest .	0·50	0·50	These figures are calculated from the average sales and the expenditure for five years.
Fuel billets, 2′ 6″ long, 10″ to 2″ diameter . .	0·66	0·23	
Fuel billets, 5′ long, 2″ to 1″ diameter . . .	0·82	0·06	

The forest staff.—The strength, duties and cost of the forest staff should be discussed and the adequacy or insufficiency, as the case may be, of the existing staff commented upon. Where alterations in the charges or in the numbers are necessary, this should be stated and explained.

Example.—The following Ranges and beats have been established :—

Name of Range and Head-quarters.	No. of beat.	Names of forests or of blocks included in each beat.	AREA OF BEAT.	Head-quarters of beat.	REMARKS.
			Acres.		
Deota . .	1	Partil, Temple, Dopta, Katatách.	1,798	Deota.	The charge of the Range is at present held by a Forester.
	2	Tádiár and Bhagiár	1,139	Tadiár.	
	3	Pipal, Dhikuri, Bamsu.	1,037	Bamsu.	
	4	All blocks . .	1,930	Sáhlra.	
	5	Naintwár and Dátmi.	1,010	Dátmir.	
		TOTAL AREA .	6,914		

The duties of the subordinate establishment are particularly heavy on account of timber works being conducted departmentally. The injuries to which the forests are liable have already been described, and the duties of the Guards may be deduced from that description. The average area of each Guard's beat is about 1,400 acres, but the forests are scattered over a large area of exceptionally difficult country. There is often a difficulty in obtaining suitable men as Forest Guards, as the hill men are unaccustomed to discipline of any sort. Proposals for increasing the staff, and making certain changes in its disposition, will therefore be made.

Labour supply.—It is necessary to know to what extent, and at what rates, it is possible to procure local labour, and whether, at any particular seasons of the year, there are difficulties with regard to the supply. Any other remarks that may appear desirable in connection with the execution of works in the forests should also be recorded.

Working circles.—In explaining what working circles it is proposed to form, their formation should be fully justified with reference to—

The state of the crop and method of treatment applied to it.
The position of the natural land-marks.
The demand for the produce, and the consequent size of the coupes.
The administrative charges.

It will generally be convenient, especially where there are

a number of circles, to show the areas included in each in a tabular form in which the names of the forests and of the blocks are recorded.

Example.—It will have been seen that the forest area consists of two portions, separated from each other by the main road from the railway line to the tehsil, and perfectly distinct in the character of their crops and in their legal position. That which is situated to the east of this road has an area of 13,631 acres, is reserved and contains, as we have seen, an irregularly coppiced forest of sál, while that to the west of the road is unclassed forest, and contains only scrub jungle which it will be proposed to work as a grazing area. This latter block must, it is evident, form a working circle to itself and it is proposed to constitute it such, calling it the "grazing circle."

As to the former, it is too large to form conveniently a single circle, and it is proposed, therefore, to divide it into two, separated by the stream and the path leading to the village, but both of which will be simultaneously worked to supply the same market which is fed by the railway. It may be argued that this division of the eastern area into two circles will render the Working-Plan more complicated. The cost of extracting the produce will, however, be less by reason of the lesser distance it will have to be carried, while the products of the fellings will be less difficult to extract and dispose of. The following statement shows the composition of these working circles, which it is proposed to call the "eastern" and "western" respectively. Each will conveniently form a Forester's charge, replacing the present arrangement by which a Ranger has charge of the Reserved forests only and two guards belonging to the subdivision, but not under this Ranger, have charge of the grazing area :—

Names of Circles.	Names of blocks included.	Area in acres.	REMARKS.
Eastern	Mangir	328	All these forests are reserved.
	Bhandal	1,130	
	Langera	1,302	
	Maila	1,466	
	Himgri	1,339	
	TOTAL AREA	5,565	
Western	Barnota	1,250	
	Sai	1,246	
	Alwas	728	
	Baira	1,420	
	Tisa	746	
	Chanju	1,488	
	Kalel	1,188	
	TOTAL AREA	8,066	

Names of Circles.	Names of blocks included.	Area in acres.	REMARKS.
Grazing . . .	Suo . . .	2,043	These forests, although demarcated, have not been reserved.
	Lil . . .	892	
	Belj . . .	1,994	
	Tunda . . .	2,600	
	Aulas . . .	1,586	
	Kothi . . .	1,785	
	Pasu . . .	1,170	
	Maila . . .	2,491	
	TOTAL AREA .	14,561	

Subdivision of the area into blocks or compartments.—The degree of elaboration with which the forest has been subdivided and the crops described should be briefly explained and justified.

Example.—The working circle has been subdivided into twelve blocks of an average area of 350 acres, having natural boundaries which follow either roads, ridges or streams. As the forest is to be worked by the selection method and the exploitable species is growing scattered over this area, a more minute subdivision and description has not been considered necessary.

The boundaries of the compartments have been marked out by deep blazes on all the boundary trees, whilst, at all salient angles, earth mounds, carrying hardwood posts bearing numbered plates, have been placed.

Analysis of the crop.—It should be explained whether the trees have been counted and measured and whether the areas containing different crops have been differentiated, or simply estimated by eye. Where a valuation or enumeration survey has been made, it should be explained whether the stock on the whole area has been counted, or whether the number of trees has been obtained by means of sample areas, or how. Whatever method of analysis and description has been employed should be justified.

Example.—No accurate differentiation of the crops in each compartment has been attempted as this was not considered to be necessary, in view of the treatment applied. The number of trees has, however, been ascertained.

A brief analysis of the crop, based on any detailed description or "Stock Map" that may have been prepared should be given. Where the number of trees has been counted or estimated, these should be stated and the statement supported by a record (in the Appendix) of the survey made. If

the areas occupied by different crops have been differentiated, the age-classes and the area occupied by each should be stated. Where the stock has been simply assessed by eye, a summary description of the crop in each subdivision may be given.

Example.—The records show that the standing stock in the forest may be classed as follows:—

Exploitable trees over 2′ in diameter	65,871
Trees 1½′ to 2′ in diameter	87,846
„ 1′ to 1½′ in „	63,000
„ below 1′ in „	927,000

Where the crops had been differentiated as to their component age-classes, the summary analysis would be given by area :—

	Acres.
Mature, regular, high forest from 100 to 150 yearsold . .	1,208
Selection-worked high forest from 40 to 150 years old . .	1,144
Pole crops of thickets from 50 to 90 years old . . .	955
Former coppice undergoing seed and secondary fellings .	87
Young thickets and seedlings	626
Blanks and glades	167
TOTAL AREA .	4,187

Purpose with which forest should be managed.—The object or purpose in view, such as the production of timber of a certain kind and size, the protection of the trees, &c., or whatever it may be, should be deduced from the facts recorded in the first part of the Report and plainly stated.

Example.—The facts recorded in paragraphs 12 to 15 and 16 of this Report show that the purpose with which the forest should be worked is to provide fuel and wood for the local population. Timber of the largest size is not required, as the largest pieces used can be obtained from trees of one foot in diameter.

Method of treatment.—The proposals for each working circle should be discussed separately, commencing with the method of treatment. This should be stated and its adoption justified by a brief explanation of the reasons which render it necessary to employ it.

Example.—Although the coppice system of working introduced in 1871 has not been followed in all its details, its general principles have been adhered to, and, broadly speaking, have given the results that were sought. It is therefore proposed to continue this method of coppice with standards. The method of high forest, it might be argued, would also furnish both timber and fuel, and possibly the former in much larger quantities than the method of coppice with standards. The present state of the area formerly set apart for treatment as high forest does not, however, favour the conclusion that the method of high forest is suitable to the species in the forest. The volume of timber on the

ground is undoubtedly great, but the trees have in general a forced and weedy appearance, and it is not improbable that high forest could only be regenerated by artificial means. Every indication points to the conclusion that the principal species thrives best when grown in a state of partial isolation. It finds these conditions when grown as standards over coppice, and, as far as can be seen at present, by adopting this method the forest is more likely to furnish timber than by any other method of treatment.

The exploitable age.—The manner in which the calculation of the exploitable age is made, and the facts on which it is based, should be stated. These would be derived from what has been recorded with regard to the products required, the object with which the forest should be worked, the rate of growth, the prices realized for these products and the net value standing in the forest of the trees which furnish them.

Example.—It has been stated that the object with which this forest should be thus worked is to supply fuel and wood for the neighbouring population, and it has been decided that this may best be accomplished under the coppice method of treatment. The size of the fuel billets required, it has been shown, should not exceed 4 inches in diameter, as, if larger, it becomes necessary to split them, and they bring in a lower net price. From the ascertained rate of growth of the coppice, it is shown that this size is attained in about 12 years. It is, therefore, proposed to exploit the forest on a rotation of 12 years. As regards the standards, we have seen that trees of 1 foot in diameter furnish all the material that is required, and hat they attain this size in about 60 years. It is, therefore, proposed to retain a certain number of the standards of each coupe for five rotations of the coppice.

General scheme of working and calculation of the possibility.—The calculation of the possibility should be based on the analysis of the crops, or where an enumeration survey has been made, of the standing stock in the forest.

The general scheme of working and the method of calculation having been explained and the possibility determined, the stock should be criticised as regards its sufficiency or insufficiency, the arrangement of the age-classes, and so forth. The length of the preparatory period during which it will be necessary to reconstitute the crop or lead it back to normal condition, should also be explained.

Example I.—It is proposed to exploit the principal species, teak, by the selection method, and the length of the felling rotation adopted is 20 years or half the period, 40 years, that is required for a tree of the lowest dimensions of class II to attain the lowest dimensions of class I. The records of the valuation surveys show that the age-classes are as follows:—

Class I	. . . . .	65,871 trees.
„ II	. . . . .	87,846 „
„ III	. . . . .	63,000 „
„ IV	. . . . .	927,000 „

It may be assumed that as there are 87,846 trees of the 2nd class, the greater proportion of which will attain exploitable dimensions in the course of 40 years, the number of trees which will become exploitable each year is something less than $\frac{87,846}{40}$, or about 2,000 trees. Under a felling rotation of 20 years, the normal exploitable stock on the ground is therefore—

In area first felled over		(20 years felled)	$\frac{2,000}{20}$	×	20.
„	next	„	(19 years felled)	$\frac{2,000}{20}$ ×	19.
	&c.		&c.	&c.	
„	last	„	(1 year old)	$\frac{2,000}{20}$ ×	1.

The normal exploitable stock expressed in trees would, therefore, be 100 × (20 + 19 + &c. + 2 + 1) = 21,000 trees.

There is therefore a *surplus stock* on the ground of 65,871—21,000 or, say, 44,000 exploitable trees.

The condition of the crop shows that there is a great want of trees of class III, and that there will be a dearth of exploitable trees during the period when these trees mature, that is to say, 40 years hence, and during a period of some 40 years after that, until 80 years hence when the present stock in class IV matures.

A preparatory period of 80 years is, therefore, necessary in order to reconstitute the stock, and it is proposed to spread the felling of the surplus stock of 44,000 trees over this period (or rather to diminish the fellings of the younger stock proportionately). The annual fellings should, therefore, be within $\frac{44,000}{80}$ + 2,000 trees, or about 2,550 trees a year.

Period for which the fellings are prescribed.—The length of time for which the felling operations are prescribed should be explained and justified. In the case of selection fellings, the period chosen would be the length of the felling rotation, and the rotation chosen should, therefore, be justified.

Example.—It is desirable, in order that the area worked over each year should not be inconveniently large, that the felling rotation should be as long as possible without risking the loss of trees which die or fall in the interval between the fellings. It is considered that 20 years is the utmost limit that can be allowed under these conditions. The length of time required for trees of the lowest dimensions of class II to attain the lowest exploitable dimensions being 40 years, it will be convenient to take that period as the basis in fixing the felling rotation. Consequently a felling rotation of 20 years, half the period, has been adopted, and operations are prescribed for that length of time.

Areas to be felled annually or periodically.—The formation of the annual or periodic coupes should be explained, and the calculation by which the size of the coupes has been determined should be given with such detail as the circumstances in each case require. Examples of this calculation have already been given.

The allocation of the fellings should be discussed where necessary, and the proposals made justified, important departures from the rules regarding the allocation of the fellings being explained. In the case of the selection method the order followed in making the fellings, provided that some order is adhered to, is of little importance, but where one or two species only are being exploited, it may be necessary to form coupes of equal resources in these species. This should be explained and justified.

Example.—The order to be followed in making the fellings would, under normal conditions, be as they are numbered 1, 2, 3, &c., but as coupe No. 14 contains many mature and over-mature trees, it is desirable that it should be taken in hand at once: moreover, as the mature trees are in excess, and there is a surplus stock which must be removed, an excess felling is justified. It is therefore proposed to work coupe No. 14 in addition to coupe No. 1 in the first year, returning again to No. 14 in the usual order in the 14th year of the felling rotation. By this means, after the first year, it would be possible to resume the regular order.

Rules regarding the conduct of the fellings.—The special statement of fellings should be followed by such general instructions with regard to their conduct as may be necessary for the guidance of the local officers. These instructions should not be too elaborate or detailed, but should be drawn up on the supposition that the officers who have to carry out the provisions of the working-plan will understand their business and that they will be responsible for the fellings they make.

Example.—The trees are to be felled according to the principles of the selection method subject to the following conditions:—

The prescribed number of trees may be felled annually, or the fellings may be carried out over the whole area to be worked during three years in the first or any other year of that period.

No tree under 6 feet in girth, at breast-height, shall be felled, except in certain cases where, in the opinoin of the executive officer, a tree shows signs of premature decay.

Isolated trees should not be felled, unless with the object of clearing away cover to help the establishment of already existing seedlings.

It will generally be necessary to draw up a forecast of the expected condition of the forest crop at the expiry of the period for which the fellings are prescribed. The condition aimed at would of course be in accordance with the purpose with which the forest should be worked, and the mere formulation of the anticipated condition would, better than anything else, serve to illustrate and explain the nature

of the fellings to be made and the immediate object to be sought in making them.

In many cases the best way of directing the conduct of fellings will be by means of suggestions recorded in the "Remarks column" of the descriptive statement.

In some cases it may be necessary to deal at greater length with the fellings to be made.

Example.—The rest of the periodic block, which contains old fir forest, will be regenerated during the first period by successive seed, secondary and final fellings. These fellings will be made by volume, care being taken to complete, as far as possible, all the seed fellings within the first 12 years of the period.

The local officers will execute these regeneration fellings on their own responsibility, in such a way as to secure with the greatest certainty the natural re-stocking of the ground. The seed fellings should be made close, the cover being raised by pruning the lower branches, the greatest care being bestowed on the condition of the surface soil. Wherever a thick coating of moss, bilberries or heather, covers the ground, these should be removed in wide strips. Should the ground be overrun by herbaceous growth and there is reason to fear that the plantings will not succeed, it will be necessary to make clean fellings and re-stock artificially, using the pine as a nurse, and, when the latter shall be 30 years old, introducing the silver fir and the beech under its shelter. There may chance to be spots where the shelter is sufficient for the direct rearing of the silver fir, and where the soil is of sufficient depth and fertility to render it unnecessary to go to the expense of using the pine as a nurse. In this case a middle course should be followed, and pine and silver fir should be sown in alternate strips. In their early years, the pines will protect the firs and they may then be gradually extracted in accordance with cultural requirements. No saplings and poles that are not vigorous and growing in blocks should be retained. All those which are too old, although yet thriving, that are weedy in appearance, and those in, or which have been, under shade for a long time, ought to disappear. It is only in cases where their presence may be necessary as a protection to younger growths, that they should be retained temporarily until the latter have passed the stage at which they require shelter. When it is considered that a pole crop of silver-spruce fir is in the conditions that render it desirable that it should be preserved, it should be thinned if necessary, and all old trees which may be considered either useless or prejudicial extracted from it.

Tabular statement of fellings.—As a rule, the whole of the prescriptions are summed up in a single simple statement containing the following columns:—

Year or period for which operations are prescribed.
Area to be taken in hand each year or period.
Nature of fellings to be made.
Remarks.

More than this is seldom required *as a prescription*, no

matter how complicated the operations to be prescribed may be. The area to be taken in hand should, where this is possible, be shown under the different headings: wooded, blank, unproductive. In the last column should be entered either the area, the number of trees, or the volume of material, to be felled.

Example.—The following examples of statements of fellings illustrate the adaptation of such a statement to different classes of operations:—

Statement of Fellings.

Year or Period.	Area to be taken in hand.			Area in acres.				Nature of fellings.	Area, number of trees or volume to be felled.	Remarks
	Forest.	Block.	No. of coupe or compartment.	Wooded.	Blank.	Unproductive.	Total.			
				Successive Regeneration Fellings (by volume).						
1880 to 1889.	Lallatun	2nd periodic block	I. II III.	785	20	3	808	Regeneration.	35,893 cubic feet annually.	The fellings may be preparatory, secondary or final, or all three may be undertaken together by the group method.
				Selection Fellings (by number of trees).						
1880-81	Anduri	Paimar	I.	271	36	6	313	Selection.	200 trees annually.	Of those 170 to be sál and 30 sain.
1881-82	Do.	Do.	II.	276	62	10	348			
1882-83	Do.	Do.	III.	250	13	1	264			
&c.	&c.	&c	IV.	&c.	&c.	&c.	&c.	&c.	&c.	
				Thinnings (by area).						
1880-81	Anduri	Datwind	I.	71	22	6	99	Thinings.	71 acres.	Thinnings over one-tenth of the area (71 acres) to be repeated three times on each area (or once every 10 years) during the period.
1881-82	Do.	Do.	II.	73	2	12	87	Do.	73 ,,	
1882-83	Do.	Latoon	III.	86	32	61	179	Do.	86 ,,	
&c.	&c.	&c.	IV.	&c.	&c.	&c.	&c.	&c.	&c.	
				Stored Coppice Fellings.						
1880-81	Changla	Lodi	I.	87	6	2	95	Stored coppice.	87 acres.	At each coupe not less than 15 standards are to be reserved per acre on an average.
1881-82	Do.	Do.	II.	92	8	1	101	Do.	92 ,,	
1882 83	Do.	Do.	III.	86	Nil	12	98	Do.	86 ,,	
	&c.	&c.	IV.	&c.	&c.	&c.	&c.	&c.	&c.	

Supplementary provisions.—There are two classes of works of improvement, *viz.*, those which are so connected with the method of treatment that they may be considered as special to the working circle, and those which are common to the whole area dealt with in the Report.

Thinnings and cleanings, the re-stocking of blanks and the introduction of superior species into the crop obviously belong to the former category, and grazing, although it may

be general to the whole area, is nevertheless more or less dependent on the treatment adopted, at least as regards the closing and opening of blocks.

Such works or regulations should be dealt with in treating of the working circle to which they relate. It will be understood that the degree of detail with which these regulations should be drawn up, and the nature of the provisions, depend on the circumstances of each case, and that no guide as to what should be stated in every case can be given. Large works of construction should form the subject of a separate report, and should only be indicated in the Working-Plan Report, so far as they affect the forest management or treatment.

Improvement fellings.—These should be prescribed by area, with such details as regards the manner of conducting them as the circumstances require.

Example.—Thinnings should be made at intervals of eight years, thus passing twice over the entire area, where advance growth exists, in the course of the felling rotation. These should be made in the following order :—

Year of operation.	Area to be operated on.			Remarks.
	Name of Block.	Area.	Estimated area to be thinned.	
1889-90 / 1901-2	Banui	629	167	
1891-92 / 1902-3	Sarni	702	206	
1893-94 / 1903-4	Rupani	564	221	The estimated cost of these thinning operations is R5-8 per acre.
1895-96 / 1904-5	Chatri	498	196	
1896-97 / 1905-6	Masrund	723	205	
1897-98 / 1906-7	Kangu	435	189	
1898-99 / 1907-8	Sloh	801	202	
1899-1900 / 1908-9	Daud	398	186	
Total	...	4,750	1,572	

In these thinnings the following work should be done:—

All suppressed deodar seedlings should be relieved from the injurious cover of inferior species, either by the lopping of a branch or two, or the ringing of the immediately overtopping trees.

All fertile deodar trees, with crowns contracted on account of the heavy surrounding foliage of other trees, should be set free by the ringing of some of the latter.

In the vicinity of, or on slopes immediately below, fertile deodar trees, the soil should be prepared for the reception of any seed that may fall, by being cleared of all undergrowth, and freed, if necessary, of the thick covering of undecomposed leaves.

In thinning out the leaf canopy, it should not be forgotten that deodar in its youth stands a great deal of shade, and requires protection, and that bright illumination results in the soil of these forests being overrun with a dense growth of weeds and shrubs. The object of ringing and not felling the obnoxious trees is not only to uncover the soil and vegetation below gradually, but also to save the heavy outlay that felling would require, and to prevent the ground from being encumbered.

Regulation of rights and concessions.—It should be laid down what areas are to be opened to grazing and at what periods. The number of cattle to be admitted should, where possible, be prescribed and, generally, it should be laid down how the rights can be met with the least amount of injury or danger to the forest.

Example.—The annexed tables show the periods for which the several areas will be opened or closed to grazing. They have been arranged with a view to giving each area a rest of five years. The number of cattle to be admitted is that given in the statement of rights, and the areas opened will allow 3 acres per head of cattle grazed. When one area is closed, another will be opened and, on an average, one-third of the whole area will always be open to grazing:—

Years during which opened.	Area opened in each year.		Remarks.
	Name of block.	Area.	
1884 to 1889 . . .	Jelluki . .	3,117	
1889 to 1894 . . .	Shahpur . .	2,832	
1894 to 1899 . . .	Ganchan . .	2,979	

The Raura block of 106 acres, which it is proposed to work regularly, will have to be closed. Grass-cutting, however, can be permitted. The portion below the path from Raura to Mairawana, or about ten acres, and which contains chiefly young chir, may, however, be left open, as it need not be worked, and it is inexpedient to close the path which is much used.

It has already been explained that, as regards rights to timber, it may be necessary either to form the area burdened with the rights into a separate circle, in which case its working will be dealt with in the ordinary way as a principal provision of the plan, or to allow for this material in calculating the possibility. In the latter case the removal of the right-holders' trees would be regulated in such manner as was necessary, separately from the fellings made under the principal provisions of the plan.

Example.—The number of trees that will be required annually by the villagers has been estimated as follows from the average consumption of the past five years. These trees will be marked by the Range Officer for removal by the right-holders on production of the required passes :—

Description.	Forest from which to be granted						Remarks.
	Chiliánás.	Kárchuli.	Padholi.	Dwársáon.	The Chaubs.	Total.	
Chir trees, 2 diameter .	8	8	12	88	16	132	
„ poles, 1′ „ .	60	268	149	76	58	611	
„ oaks for charcoal .	10	8	12	27	16	73	

Hitherto free-grant trees have been marked in an irregular manner, the same khat often taking trees from different localities, and the villagers frequently being allowed to select their own trees regardless of the well-being of the forest. This must cease, and all trees marked by the Ranger according to the usual method of making selection fellings.

Sowings and plantings.—The sowings and plantings should be discussed, only such details with regard to their execution as appear to be necessary for the guidance of the local officers being given.

Example.—It is proposed to introduce *fun*, and other superior kinds of trees into the crop by *planting* them in the coppice. The want of valuable species to serve as standards, and the immense value that this would add to the forest have been fully explained. To enable these plants to hold their own in the dense coppice growth (only certain kinds of shade-supporting species could be so introduced), good-sized seedlings should be planted *in pits*. Nurseries for these trees should be established in the compartments to be felled three years in advance of the felling.

Sites for nurseries should be chosen in well-drained localities. The nursery beds should be terraced and the seeds should be sown in lines, a foot apart, in November and December. Whilst in the nursery, the young plants should be protected in seasons of drought and frost by means of grass tatties raised a few feet off the ground. The young seedlings should be put out *immediately* the rains set in.

Roads, buildings and other works.—The improvements indicated above are more or less connected with the method of treatment adopted. There are, however, many works, such as the improvement of boundaries, the construction of roads and buildings and, in most cases, the clearing of fire-lines which may have no concern with any particular circle.

The estimated cost of these works should, as far as possible, be given. The application of a working-plan may necessitate the construction of very considerable export works and roads, but such works should form the subject of separate report and should only be briefly indicated in the Working-Plan Report.

Example:—*Boundaries.*—The forests have been merely temporarily demarcated by *kutcha* pillars, many of which have already fallen down. In many cases it will be found possible to join together many forests, at present separately demarcated, to form one block, as, for instance, Sikri, Rupani, and Chatri; and also Kalwara, Sani, Padri, Bohar, Chirindi, and Rumbo. But in all other cases the forests should be redemarcated by *pucka* boundary pillars. It is important that where pillars are required, they should be of the best description possible. Forest records of former years show that demarcation work has frequently had to be done time after time, owing to the cheap and flimsy nature of the marks used. It is therefore proposed to construct solid masonry pillars of the most suitable rock (generally slate) found in the locality, about 2 feet at base, 1 foot 6 inches at top, and 2 feet 6 inches high, on a solid foundation 3 feet square. It is estimated that each pillar of this description will cost from R2 to 4, according to its position and elevation. Owing to the configuration of the ground, one pillar is often not visible from the next, and there is often, in consequence, uncertainty as to how the boundary runs in many places. The remedy is to cut a two-foot path from pillar to pillar, wherever the boundary is not a natural one, or a road does not already exist. In paragraph 6 it is estimated that there are 73 miles of artificial boundary, so that if 7 miles were made every year, after ten or eleven years the whole work will have been completed.

It is accepted that, as stated in Part I, unless forests open to rights are fire-protected, their deterioration must continue, and they must, in course of time, disappear in accessible places, especially if the demand of right-holders for timber and fuel continue to be supplied from those places only as in the past. It is therefore proposed to extend protection to the following blocks not yet undertaken :—

Forests.	Area in acres.	Length of fire-line required.
Sukran	11·182	11
Gwalgarh	13·435	36
Rawasan	15·933	59
TOTAL .	40·500	106

All the other forests in the area dealt with, *viz.*, Jogi Chur, Ander-Majhera and Kauria Chaur, are already protected. The Buriwala-Mahera is an island, and requires no fire-line but the river for its protection; but grazing might be stopped in it at the beginning of the fire season. The extra cost which this protection will involve is estimated, on the basis of what similar protection in other areas in the division cost, at R250 a year. This will bring the total cost of fire-protection in the tract to R700 annually.

The roads, bridges, and buildings enumerated in paragraphs 80 to 85 will have to be kept in repair, except the sleeper-carrying paths in the blocks which have been worked out. A year before the selection fellings in the Deoda forest are brought to a conclusion, it will be necessary to make a good bridle-path to Bamsu, by widening the present path from Deota, and a similar path will have to be made later on from Deota to Sahlra along the main ridge, a short one joining it from Bamsu. Roads passable for pack animals carrying food for the sawyers and coolies must also be made along the right bank of the Tons from Tadiar, passing by the mouth of the Bamsugad to that of the Kunigad, down which will come all timber from the Sahlra forest; whilst branches will have to be made up the two gads referred to, and also one from Naintwar bridge to Koarbo, the road on the left bank of the Tons as far as that bridge being widened and improved.

Forest rest-houses and servants' quarters will have to be built at the camping ground in the Sahlra forest, and at the mouth of the Kunigad, whilst the Bamsu hut must be enlarged and improved. Houses for the Forest Ranger, and chaukis for Forest Guards will be required at Bamsu, Sahlra, Kunigad, and Naintwar; godowns for the food-supply will also have to be built at Bamsu, Sahlra and Naintwar. The cost of these various works will on an average come to R5,000 a year.

Summary of works of improvement.—A summary of the works of improvement may in some cases, with advantage, be given. In this, a brief description of the works, the probable date of their execution and their cost should be indicated.

Example.—Summary of works of improvement.

			Rs.	
1892-93	Joli . . .	Facilitating the reproduction of deodar, as described, in about 280 acres.	560	Includes cost of fencing small portions where necessary.
	Padri, Bohar .	Collecting seed, preparing and sowing 20,000 square feet of nurseries as described.	165	
	Ditto .	Planting 20 acres, as described . .	260	
	Ditto .	Resowing old nurseries, 20,000 square feet.	40	
	Joli-Thali .	Opening out a path through the forests, and from the forests to Sao river, to join path along that river, about 3 miles.	300	
	Sao . . .	Improving the village road along the Sao nalla, about 3 miles.	300	
	Sai . . .	Building a small forest rest-house on road leading to forests in the Sao valley.	300	Not including value of the timber.
	Joli-Thali .	Demarcating the forest boundaries with about 30 pucca pillars as described.	60	

Miscellaneous provisions.—The Working-Plan may fittingly prescribe the keeping up of records, or the making of experiments with a view to the future revision of the plan on more accurate data or for other purposes.

Example.—A journal, as prescribed under section 70 of the Forest Code, is to be kept up. In this book a register is to be kept up, separately for each block, of the operations carried out therein, the yield from the fellings, thinnings, dead and wind-fallen trees, &c., &c., &c In addition to this, a portion of the journal is to be devoted to a general summary of each year's work, to notes on all experiments and observations made, cost of exploitations, revenue and expenditure, and so forth, for the forests *as a whole.*

Measurements of the rate of growth of the oak should be made regularly once a year in the sample plot and entered in the Forest Journal. The counting of the concentric rings in conifers should be continued. The record should be kept by compartments, and both the aspect and altitude should be invariably noted. The record should be kept in the Forest Journal.

Changes in the forest staff.—These should be indicated with such detail as circumstances require. The proposals made should be justified by reference to facts recorded in the first part of the Report.

Example.—It has been already fully explained that the staff is inadequate and must be increased if these proposals for working the forest are accepted.

The following Protective and Executive establishment will be required. A statement showing how it is proposed to distribute and employ these men is attached to this Report. Even with the proposed increase the average forest area (formed of a large number of small forests scattered over difficult ground) under each Ranger will be 17,000 acres, and under each Guard 1,500 acres:—

Upper Forests, four Ranges.	Ravi	3 Forest Rangers on	R50 to R150 a month	.	R150 monthly
		5 Foresters on	„ 15 „ „ 40 „	.	„ 115 „
		45 Guards on	„ 5 „ „ 10 „	.	„ 285 „
Lower Range.	Ravi	1 Forest Ranger on	„ 50 „ „ 150 „	.	„ 50 „
		2 Foresters on	„ 15 „ „ 40 „	.	„ 45 „
		22 Guards on	„ 5 „ „ 10 „	.	„ 135 „
Total estimated cost at starting				.	„ 780
Present sanctioned monthly expenditure				.	„ 610
Proposed monthly increase				.	„ 170

This does not include the establishment employed in the forests round Dalhousie which will be separately reported on.

Forecast of financial results.—The report should conclude with a forecast of the anticipated financial results of the proposed management. The anticipated results should be criticised and compared with the results obtained in the past.

Example.—It is impossible to estimate more than the *average annual* revenue. We are, however, justified in assuming that in the course of ten years the timber now in the forests will be worked out, and that this will compensate for the portion of the timber to be felled during the next ten years, which has not arrived at depôt at the end of the time we are considering.

It will be noticed from the following statement of the anticipated revenue and expenditure during the next ten years, that but little profit from a financial point of view is obtained from the proposed working of the forests. It is not intended to be otherwise. The object Government had in view in working these forests is not to trade as timber speculators, but to secure a regular supply of timber for the population in the neighbouring town, and to manage the forests so that they should be always capable of furnishing this supply. It has, therefore, been here proposed to devote the greater portion of the anticipated net revenue from the timber transactions to the improvement of the forests, which it has been shown are in a dangerous condition as regards their future. The anticipated receipts during the next ten years compare, it may be thought, too favourably with the actual results of the past ten years. It will be seen, however, that it is proposed to fell more than double the number of trees.

Sources of revenue and items of expenditure.	Estimated average annual receipts and charges.	Average annual receipts and charges during past ten years.	REMARKS.
	R	R	
Timber and fuel	52,000	..	
Minor produce and miscellaneous .	1,300	...	
Total receipts .	53,300	29,278	
Timber works	11,000*	5,200	* This includes one-seventh of whole proposed expenditure on the purchase of new tramway stock.
Roads and buildings	6,000	2,176	
Plantation and other works of improvement	21,000	8,121	
Salaries of establishment, including a portion of the Divisional Controlling and Office establishment charges	8,500	6,232	
Total receipts .	46,500	21,729	
Net surplus .	6,800	7,549	

APPENDICES.

Maps—The working-plan should be supported by whatever maps are required. Ordinarily those would consist of—

(1) A general map on a small scale showing the

whole tract dealt with, the distribution of the different forests; the boundaries of working circles and of administrative charges, &c., &c.

(2) Separate maps for each circle, on a scale of not less than 4 inches = 1 mile, showing the boundaries of the blocks and, if any have been formed, of the compartments and of the coupes.

Description of the crop in each block.—It is generally necessary, where any thing of the nature of a finished Plan is prepared, to record separately for each subdivision into which the forest has been divided, with a degree of minuteness as the circumstances of each case require, the more important points connected with—

(*a*) the *situation* (the relative position of the area and, in the hills, the aspect and slope of the ground);

(*b*) the *soil* (the nature of the underlying rock, the state of its surface; its composition and physical condition; depth, and generally its fertility);

(*c*) *the composition and condition of the standing crop* (type or class of forest; component species and their relative proportion; age; density; state of growth; state of reproduction; past treatment; suitable treatment, general remarks).

It has already been explained that this information may be graphically represented in what has been called a *stock map* and that such maps may, if they do not replace, at least supplement, the written descriptions. In any case, the written record should, in order to fulfil the purposes for which it is required, be as brief as possible. Lengthy descriptions defeat the object with which the record is framed, as the mind fails to grasp the picture offered and loses itself in the details. With the object of rendering these descriptions as little cumbersome as possible, they are usually given in the form of a tabular statement such as that given below. In writing these descriptions of forests which have been differentiated into their component elements, the growing stock must be described with great accuracy. In describing a coppice, the coppice and the overwood or standards should be separately described. In the case of crops for which the possibility has been prescribed by area, no enumeration of standing stock would be made and this column would be left blank. The following are some examples:—

Name of block.	Compartment or coupe.	Area in acres. Wooded.	Blank.	Unproductive.	Total.	Situation and soil.	Condition of the crop.	Standing Stock. Description.	Number or area.	Remarks.
						General description for area fellings.			Acres.	
Datmir . . .	...	103	26	2	131	Bed of nullah with gentle slope facing the west. Soil, deep resting on shale, rich and fertile.	On both sides of nullah, mature seedling forest sál, more or less pure or mixed with sain, vigorous but with no young growth; rest of area irregular scrub jungle with a dense growth of bushes, numerous young seedlings of sál amongst the bushes; numerous small blanks; no fellings have been made but area has been constantly grazed and burnt.	Sál more or less pure. Sál with sain and mixed species. Scrub . . . Grass blanks . Unproductive .	32 11 60 26 2	No fellings of sál until reproduction improved by exclusion of grazing.
						General description.—Selection treatment.			No.	
Sagli . . .	...	...	...	...	562	West flank of spur; aspect westerly but northerly and easterly on side spurs; steep gradients, often precipitous; elevation 6,500 to 8,000 *Soil* rich loam; well covered, generally deep but shallow at summit where rock outcrops.	In upper portion kharsu oak with blue pine, &c.; deodar rare, the proportion of deodar increases on descending but mixed with spruce and silver fir. All ages represented, but trees mostly mature: many over-mature; density varying; reproduction fair; spruce and silver fir scattered seedling patches in all lower portions: small blanks here and there all through; selection fellings made in more accessible positions only.	Deodar exploitable. Deodar 1½' to 2' diameter. Do. 1½' to 1' diameter Unsound exploitable deodar.	1,689 627 806 308	Selection felling to remove over-mature deodar urgently required.
						General description.—Coppice with standards.			No.	
Dhanri . . .	1	87	3	1	91	Saddle back on ridge all coppices Rocky poor soil.	*Coppice*, irregular with numerous blanks of oak. *Standards*, pine usually of one rotation, but several old over-mature trees.	Standards of one rotation. Do. old over-mature	265 68	The removal of the old over-mature standards, and the regularisation of the coppice and restocking of blank area necessary.
						General description.—Successive fellings: method: age-classes.			cub. ft.	
Bandla . . .	a	207	6	...	213	Occupies lower basin of nullah; aspects northerly and occasionally westerly. Underlying rock shales; loose sandy clay.	Mature seedling forest of nearly pure deodar 120 to 180 years, complete, vigorous, and well-growing; reproduction good: groups of thickets 18 to 20 years; one large blank.	Deodar over 2' diameter. Do., 1½' to 2'. Do., 1' to 1½' Do., ½' to 1' Do., unsound 2' Other species, large Ditto small	3,50,000 42,600 7[illegible],900 1,82,700 30,600 6[illegible],200 50,100	Regeneration fellings immediately required.

Record of results of valuation surveys.—In the following example of a record of valuation surveys it is assumed that there are three distinct types of forest and that it has been found advisable to deal with each distinct type of forest separately, and to take sample plots in each :—

Name of Forest or of Block.	Type of forest.	Area in acres.	Sample plot.	Area of sample plot in acres.	Trees counted on Plots. Deodar trees. I	II	III	IV	Spruce Firs. I	II	III	IV	Total trees in compartment or type. Deodar. I	II	III	IV	Spruce. I	II	III	IV	Remarks.
Bagti	a	80	I	2·5	52	105	209	502	...	62	126	260	1580	3,740	6,30	14,520	...	...	...	...	The types of forest are— (a) Deodar, almost pure, with a few oaks and other broad-leaved species.
			II	1·5	24	82	106	224	...	106	189	428									
	b	120	I	1·5	6	27	48	100	52	107	220	460	540	1,770	2,220	5,400	2,040	4,410	9,180	17,700	(b) Mixed forest of deodar spruce and silver firs, with broad-leaved species.
			II	2·5	12	32	26	80	16	40	86	130									
	c	60	I	2·0	...	...	...	...	27	48	160	280	...	...	...	...	810	1,440	4,800	8,400	(c) Mixed forest of spruce and broad leaved species, without deodar: deodar and spruce are the only exploitable species.
Total number of trees in block													2,120	5,510	8,520	19,920	2,850	5,850	13,980	26,100	

Record of rate of growth.—This should show the size of the trees experimented on and the *average radius*, if rings are counted on stump, or the *depth bored* if Pressler's gauge is used, and the average number of rings per inch of radius. It is usual to group the trees in diameter classes, and to calculate the average rate of growth for each class, as this shows at once the number of years required for the class to pass into another. The following form of record may be used :—

Class or diameter of tree	Average radius or depth bored	Number of rings counted.	Average number of rings per inch of radius.	REMARKS.
	Pressler's Gauge.			
Trees below 12 inches diameter.	2·1	26	11·4	In moist valley.
	2·0	21		
	2·3	36	11·7	On high ridge, but good soil.
	1·5	20		
	1·8	26	13·2	Valley moist.
	2·0	24		
	Countings on Stump.			
	5·2	78	15·0	Stiff loam soil valley.
	5 1	51	10·0	Limestone soil valley.
	4·6	74	16·1	On exposed ridge, but fair shelter.
	Average for class		13	

CHAPTER V.

CONCLUDING REMARKS.

Ensuring the permanency of the Plan.

Laying out the coupes.—When the provisions of a Working-Plan have been drawn up there still remains, as a rule, to mark off the sites of the annual fellings, or the *coupes*, on the ground. Until this has been done the plan is incomplete; it resembles a forest demarcation which has been delineated on a map but not marked on the ground by material signs.

The degree of detail with which the fellings require to be marked off depends on the circumstances of each Plan. In the case of working circles treated by the selection method or subjected to restoration fellings, for instance, each coupe will, as a rule, be formed of one or more blocks limited by natural, or already existing artificial, land-marks. In such cases no further demarcation is, obviously, required. It sometimes happens, however, that the limits of these blocks will be roads or fire-lines, the construction of which forms part of the provisions of the Plan itself. In such cases it is well, whenever this is possible, to lay out the roads or fire-lines and to mark their position off on the ground before finishing with the Plan. This course will tend to ensure its provisions being adhered to and the subdivisions it deals with being preserved, so that it is in every way advantageous. A well considered, arrangement of fire traces and of roads for the extraction of the produce is of the first importance, and if nothing more is done than to indicate these in words, there is every chance of the directions being lost sight of. In coppice treatment especially, where the *coupes* are, comparatively speaking, small, the marking off of the roads is of special importance and very largely increases the value of the Plan and of the forest.

The control of Working-Plans.

Necessity for simplicity in the control exercised.—Working-Plans are of no use if they are not adhered to, and this will rarely be done if they are not controlled. Much of their value will also be lost unless a careful record is kept of the works carried out and the financial results of the working. A sound

system of *control* is, therefore, necessary, but in order that this control may be exercised it is indispensable that it should be of a very simple nature requiring only a few entries once a year or so regarding each forest or working circle. Also, for the same reason, it should be of such a general nature that the same forms can be used for all forests and with regard to all systems of working, however different.

It is unfortunate that this has not been altogether realized in India. The control forms first imagined were impracticable, the detailed outturn of each felling being required to be entered as a provision of the Working-Plan. It is not too much to say that the attempts made in the past to keep up the control forms have given more trouble than the information recorded has been worth.

Nature of control required.—The facts to be recorded for purposes of control may be classed under three distinct heads as follows:—

(1) The work done or fellings made as compared with the provisions of the Working-Plan.

(2) The yield or outturn.

(3) Financial results of working.

Controlling the provisions of the Working-Plan.—The control of the provisions of a Working-Plan can be effected in a very simple manner. All such provisions amount to the prescription of certain sylvicultural rules to be applied to definite areas, with the addition, in some cases, of a limitation as regards the quantity of material to be felled, or to the prescription of certain works of improvement. All that it is necessary to record and to control can, therefore, be brought under the following headings:—

(*a*) Year or period of operating.

(*b*) Locality to be exploited or in which the prescribed work is to be carried out.

(*c*) Nature of felling or other cultural operation to be made or of a work of improvement to be carried out.

(*d*) Quantity of material or number of acres to be exploited or expenditure to be incurred on a prescribed work.

These prescriptions can be controlled by filling up a form such as the following once a year:—

Control Book, Runsi Range, ... Division.

Year.	Provisions of the Working-Plan.				Operations carried out.			
	Nature of felling or other operation to be carried out.	Locality		Quantity of material or number of acres to be exploited or expenditure to be incurred	Nature of felling or other operation carried out.	Locality.		Quantity of material or area exploited or expenditure incurred.
		Name of block.	Area			Name of block.	Area in acres.	
				Derbunga Circle.				
1890-91	Selection felling.	Bansi . Maila .	250 370	650 chir trees.	Selection felling.	Bansi Maila (half)	435	450 chir trees.
	Artificial restocking with chir.	Sudkot .	150	R750	Nothing done.			
				Uparkot Circle.				
1890-91 .	Thinnings .	Loha .	350	70 acres	Thinnings .	Loha . .	350	70 acres.
				All Circles.				
1890-91 .	Clearing fire-lines	...	...	10 miles, R350.	Clearing fire-lines.	...		7 miles, R240.

In this form it will be seen that works of improvement, such as climber-cutting, thinnings, etc., can be entered as well as other works, such as plantations, the construction of roads and houses, etc. As a rule the expenditure is the best means of controlling such works. Thus, for instance, where a certain forest was found to require roads in order to develop it and increase the *net price of the produce sold from it*, which was below the average, it would be sufficient to prescribe the expenditure, annually, on roads, of a certain sum or a certain percentage of the net revenue after deducting the expenditure on timber works. Such a prescription could be far more readily and usefully controlled than a detailed statement of definite roads or buildings to be constructed, though these might usefully be *indicated* in the Plan without being prescribed. Until Working-Plans are drawn up with simplicity and more detailed control than is indicated above is not sought to be exercised over them, they will only give rise to useless correspondence and will not be controlled or adhered to.

Recording the results of working.—Little need be said with regard to the record of outturn, except that it should be

quite separate from the statement of the provisions of the Working-Plan proper.

Record of financial results.—The record of financial results should be nothing more than a brief abstract of the annual receipts and expenditure. It is unnecessary that details should be given, but it is well, in order that the capital invested in the forest may be known and its value tested from time to time, to distinguish *capital expenditure* from *current outlay* on annually occurring works of protection and repairs, protective establishment, and so forth.

A form, such as the following, could be written up annually with little trouble and would give all the information that is necessary both as regards the capital expended and the financial results of working for the year :—

Year	Receipts.			Expenditure.				
	Principal produce.	Minor produce.	Total receipts.	On timber works.	Capital outlay on works of improvement.	Current outlay on protection and maintenance, including establishment.	Total expenditure.	Net money yield per acre.
	R	R	R	R	R	R	R	
				Deibunga Circle.				
1890-91	27,032	2,001	29,033	3,705	7,629	10,223	21,557	...
				Uparkot Circle.				
	...	16,509	16,509	*Nil.*	309	5,902	6,211	...

Area or unit for which separate control statements are required.—It is a question of some importance whether the above records should be kept up separately for each *working circle* or for each locality or administrative charge merely. There can be no doubt that it would be exceedingly useful if they could be kept up for each working circle and that without this much of the information recorded, especially that regarding the yield and financial results, is valueless. Also that

as regards the fellings and other main provisions of a Working Plan, a separate record and comparison for each working Circle is indispensable.

But the weakness of the forest staff, the nature of the work done and the manner in which such records have to be kept up often render it impossible that separate records can be kept as regards the outturn from, or the financial results of working of, *each circle*. It is also to be borne in mind that many works, such as buildings, roads, fire-lines, etc., are not always connected with any one particular circle, but are common to the whole area in one locality.

It is, therefore, necessary, if these returns are to be kept up without an undue expenditure of time and labour, that considerable latitude should be allowed in their up-keep, and it will be best to require their submission for each separate locality or executive charge only, such as a Range, the working circles being distinguished from one another, where this is possible, by writing the name of each across the return or statement as in the examples given above.

This matter, although one of detail, is of considerable practical importance.

G. I. C. P. O.—No. 885 R. & A.—17-2-92.—306.—H. R.

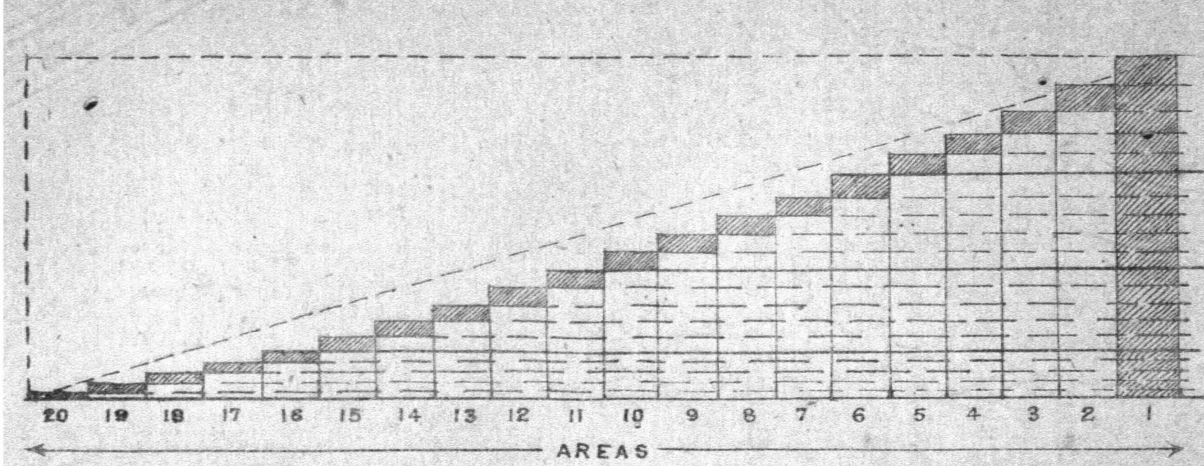

NORMAL CAPITAL OF 20 YEARS

FIG. I.

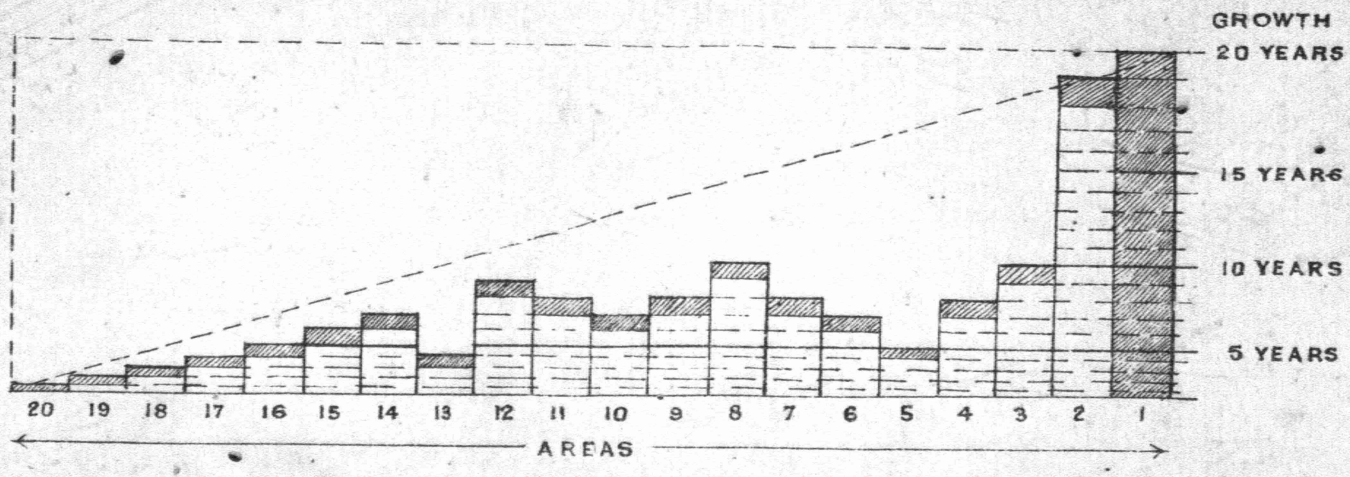

ABNORMAL CAPITAL OF 20 YEARS

FIG. 2.

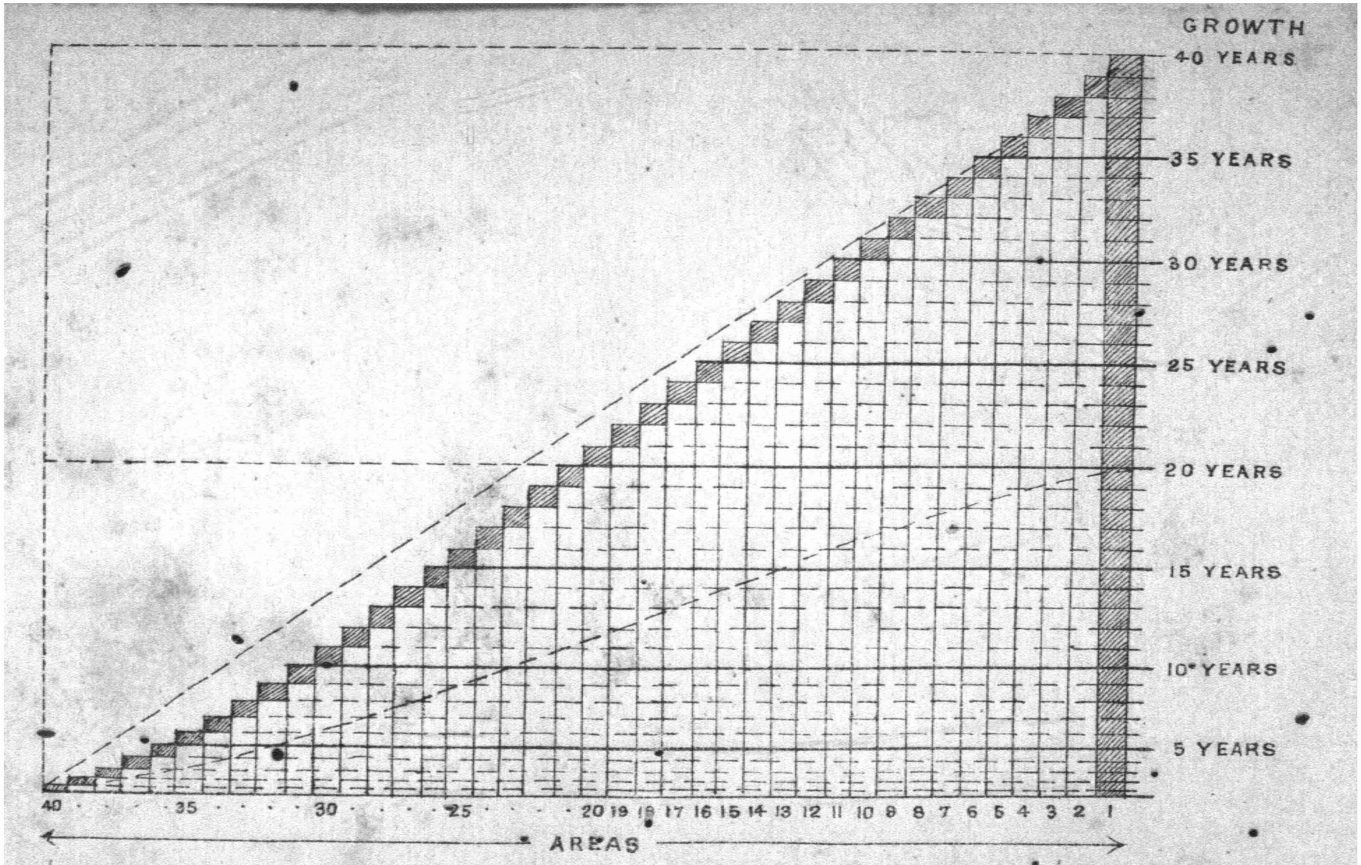

NORMAL CAPITAL OF 40 YEARS

FIG. 3.

SKETCH

SHEWING SUB DIVISION OF A FOREST

INTO

BLOCKS AND COUPES.

SCALE 1 INCH TO 1 MILE.

5000 4 3 2 1 0 5000 10000 15000 FT

0 1 2 3 MLS

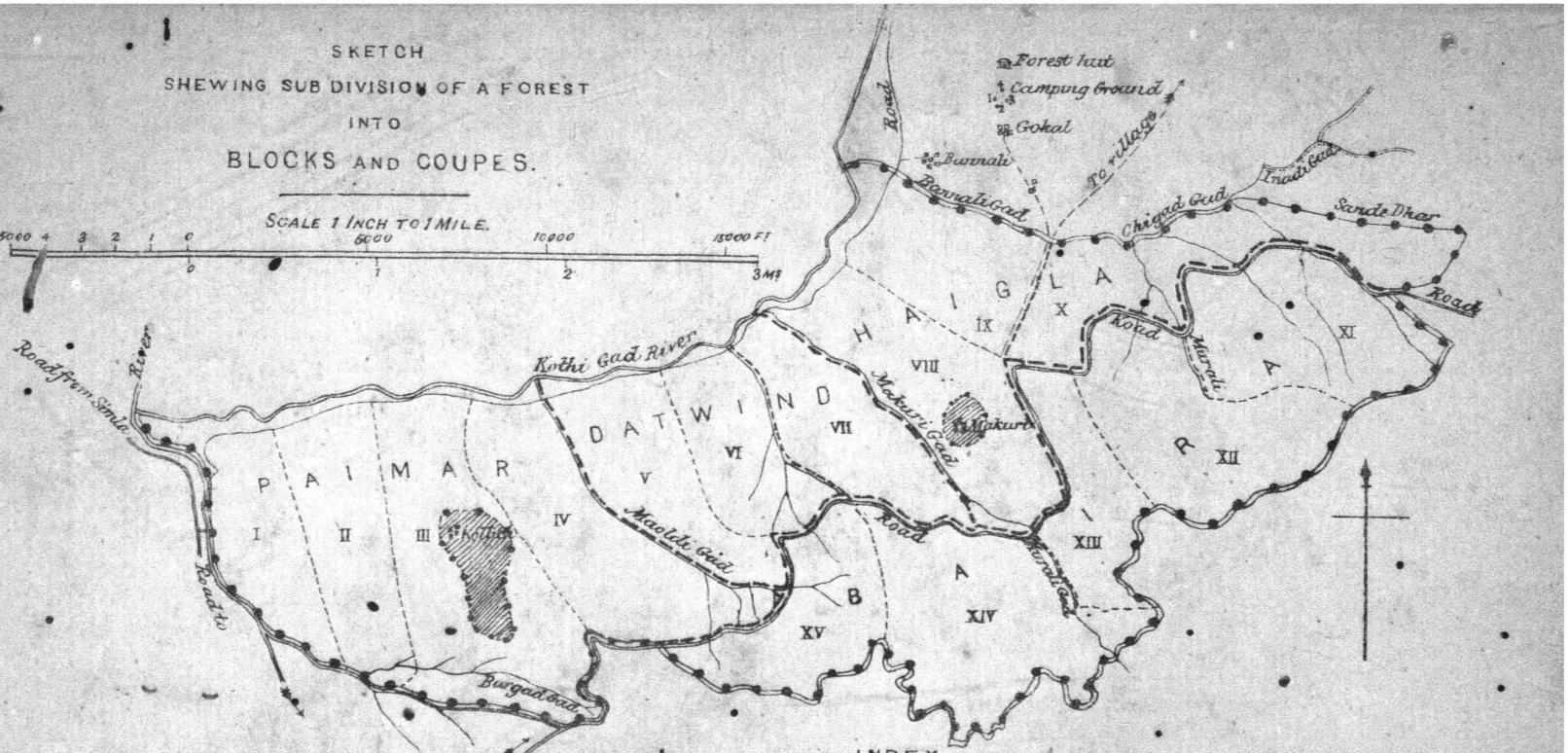

REFERENCES.

- Outer Forest Boundary
- Interior ..... Do. Blocks
- ..... Do ..... Do Coupes
- Roads
- Paths
- Trigonometrical Station
- Boundary Pillar
- Forest hut

INDEX.

NAME OF BLOCK	COUPE	AREA IN ACRES				NAME OF BLOCK	COUPE	AREA IN ACRES				REMARKS.
		WOODED	BLANK	UNPROV.	TOTAL			WOODED	BLANK	UNPROV.	TOTAL	
PAIMAR	I				338	HAIGLA	VIII				620	
	II				413		IX				387	
	III				795		X				509	
	IV				598	BAIRA	XI				580	
DATWIND	V				413		XII				660	
	VI				336		XIII				346	
	VII				383		XIV				731	
							XV				487	